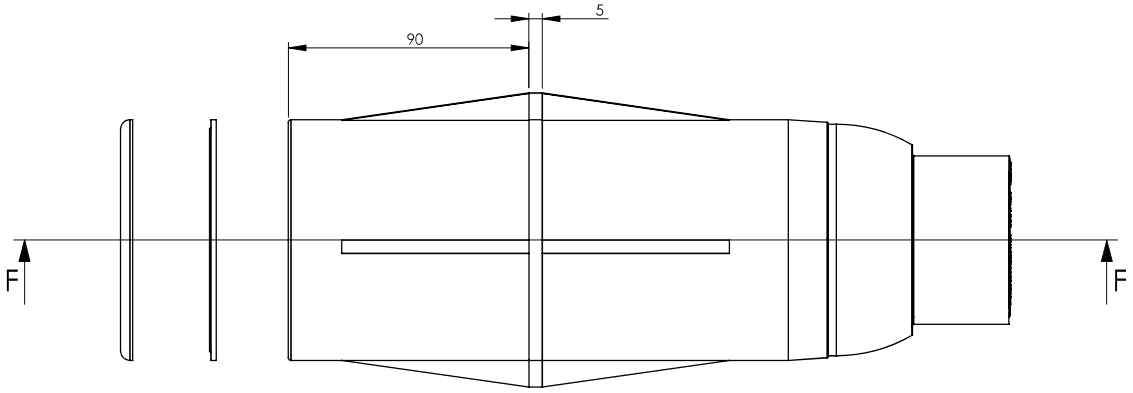

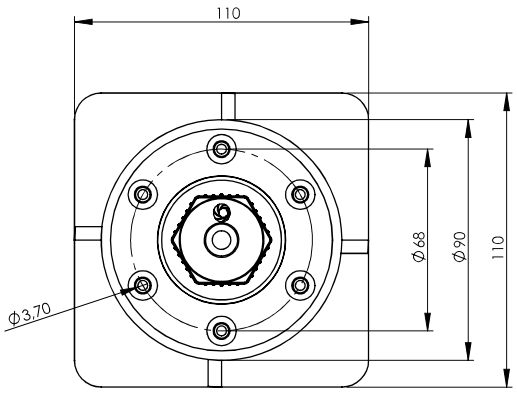

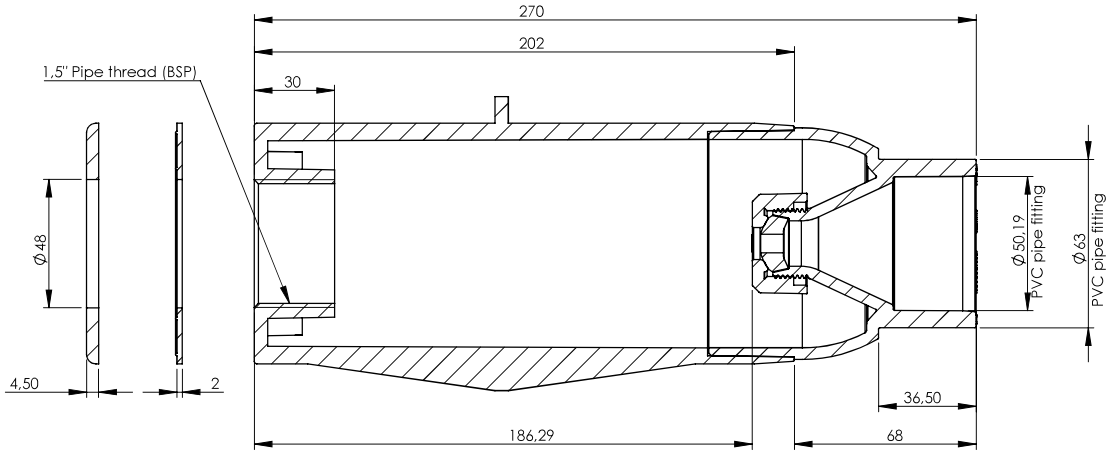

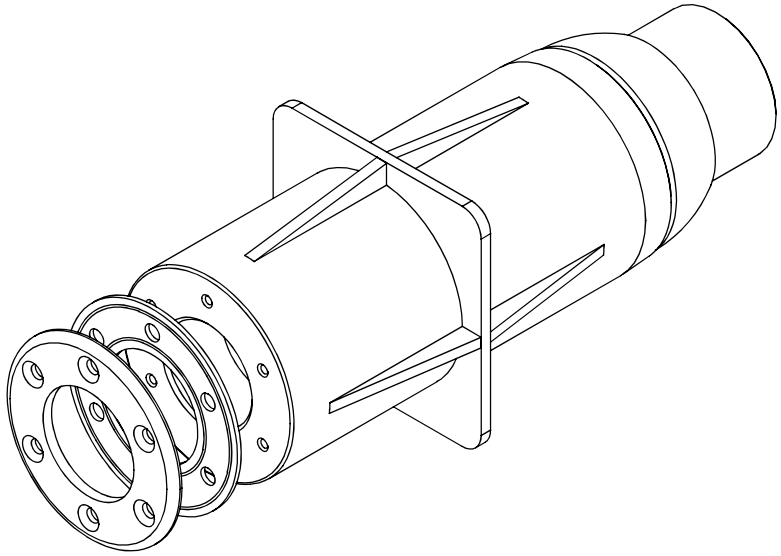

SECTION F-F

DRAWING IS FOR REFERENCE ONLY REFER TO 3D CAD DATA FOR PART GEOMETRY		NAME	DATE
	DRAWN BY	C.K.	16-04-24
	APPROVED		
	REVISION	1.0	
GENERAL TOLERANCES (UNLESS OTHERWISE SPECIFIED) LINEAR: ± 0.2mm ANGULAR: ± 0.5°	MATERIAL:		
PROPRIETARY AND CONFIDENTIAL: THE INFORMATION CONTAINED IN THIS DRAWING IS THE SOLE PROPERTY OF PROPULSION SYSTEMS. ANY REPRODUCTION IN PART OR AS A WHOLE WITHOUT THE WRITTEN PERMISSION OF PROPULSION SYSTEMS IS STRICTLY PROHIBITED	COLOR:		
	FINISH:		

HOUSE OF DURATECH innovative pool products

TITLE: **PZA-WC-NG dimensions**

DWG NO. A3

DO NOT SCALE DRAWING | SCALE:1:2 | SHEET 1 OF 1