Vulcan
THE UK'S POOL HEATING & DISINFECTION SPECIALISTS

MADE IN BRITAIN

ALL TITANIUM

NANO SPLASHER



The Nano Splasher pool heater, designed and manufactured in the UK, has been specifically engineered for above ground pools up to 12m³. This tiny but mighty, highly efficient, space saving pool heater, delivers substantial power to produce up to a comfortable 45°C water temperature while operating in complete silence.

FEATURES

- 2 models available, 2-kW and 3-kW
- Easy installation, fully equipped and pre-wired with plug
- Robust, durable construction and compact design
- Ultra-reliable flow switch for safe operation
- Fitted with temperature thermostat and overheating sensor
- Analogue control with 1.2°C differential
- Titanium flow tube and titanium heating element
- Vortex, long life, stay clean heating element technology
- 100% efficiency throughout the product life
- Sea and salt chlorinated water compatible
- Can be floor or vertically wall mounted
- Silent operation

SYSTEM SETUP

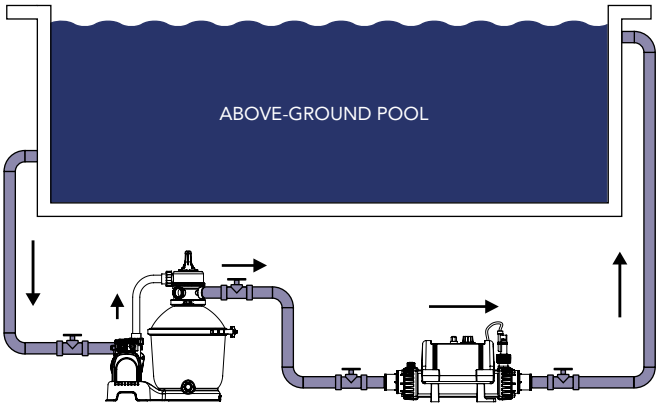

TECHNICAL DRAWINGS

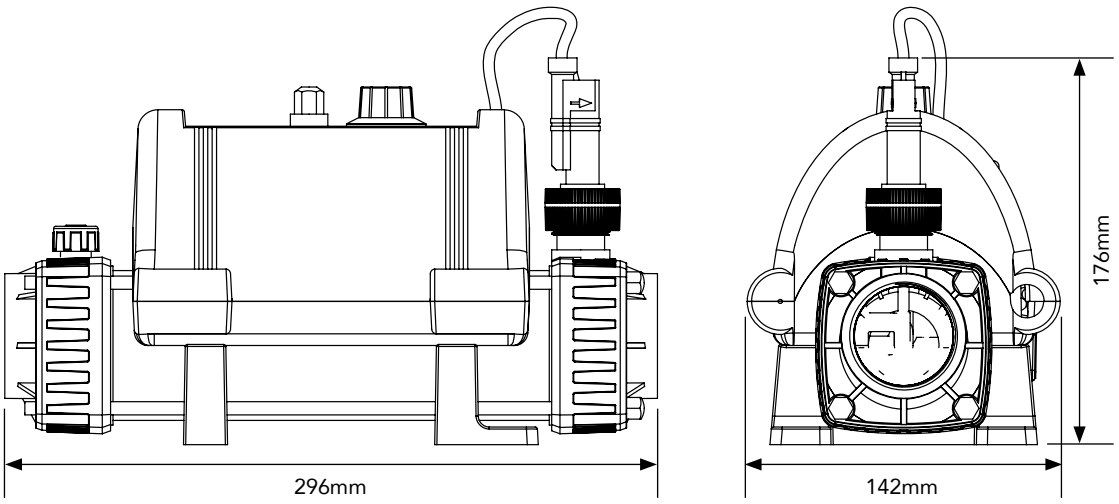

Vulcan Pools Ltd, 11 Gunnels Wood Park, Gunnels Wood Road, Stevenage, Hertfordshire SG1 2BH, UK
+44 (0) 1438 759 192 **sales@vulcanpools.co.uk** **vulcanpools.co.uk**

Vulcan
THE UK'S POOL HEATING & DISINFECTION SPECIALISTS

MADE IN BRITAIN

SPECIFICATIONS

Power supply:	220-240V Single phase
Min. flow rate:	1m³/h
Max. flow rate:	17m³/h
Heating element:	Grade 1 titanium
Flow tube:	Grade 1 titanium
Control thermostat:	0 > 45°C 1.2°C differential
Safety thermal cut out:	60°C (manual reset)
Flow switch:	Rhodium tipped reed switch with titanium fulcrum pin
Relay:	Surface mount DPDT Finder 66.82.8.230.0000
Seals:	High temperature special formula EPDM ferrules. TPE end fitting gaskets
Water connections:	1½" BSP female thread supplied with 1½"/50mm stepped PVC unions for rigid pipe and 1½"/1¼" stepped hose tails for flexible pipe
Ingress protection rating:	IP44
Frequency:	50/60 Hz
Working pressure:	4 bar maximum
Mounting:	Floor or wall mounting



MODELS

MODEL	POWER OUTPUT	LOAD (amp)	NET WEIGHT (kg)	GROSS WEIGHT (kg)	VOLUME (m³)	PRODUCT CODE		
						UK Plug (Type G)	EU Plug (Type F)	USA Plug (Type B)
220~240V 1-Phase	**2-kW**	8.5	2.83	3.54	0.019	V-N-2-UK	V-N-2-EU	-
	3-kW	12	2.83	3.54	0.019	V-N-3-UK	V-N-3-EU	-
110~120V 1-Phase	**1-kW**	8.5	2.83	3.54	0.019	-	-	V-N-1-USA
	1.5-kW	12.5	2.83	3.54	0.019	-	-	V-N-1.5-USA

PRESSURE DROP

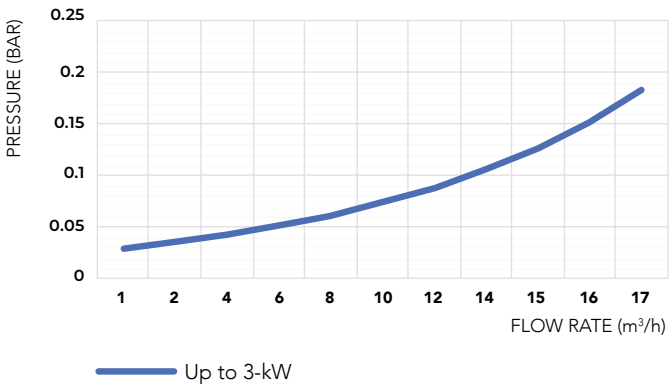

KEY PARTS



1. Pre-installed plug (UK, EU, USA)
2. Heater 'ON' indicator
3. Thermal safety cut-out reset switch
4. Flow switch
5. Temperature set dial
6. Titanium flow tube
7. Titanium heating element/s *(internal)*

Vulcan Pools Ltd, 11 Gunnels Wood Park, Gunnels Wood Road, Stevenage, Hertfordshire SG1 2BH, UK
+44 (0) 1438 759 192 **sales@vulcanpools.co.uk** **vulcanpools.co.uk**