ELECRO ENGINEERING

Unit 11, Gunnels Wood Park, Stevenage,
Hertfordshire SG1 2BH
Sales@elecro.co.uk | +44 (0) 1438 749474
www.elecro.co.uk

MADE IN ENGLAND · MADE IN ENGLAND ·

NANO SPLASHER
(ALL TITANIUM)

Specifically designed to ensure maximum safety, reliability and efficiency, the Nano Splasher fully titanium "Plug & Play" heater is an ideal solution for soft/hard sided and splasher pools.



FEATURES

- Available as 2-kW & 3-kW "Plug & Play"
- Easy installation, fully equipped and pre-wired
- Robust, durable construction
- Ultra-reliable flow switch allows safe operation
- Supplied with temperature thermostat and overheating sensor
- Compact, durable design
- Analogue control with 1.2˚C differential
- Titanium flow tube and titanium heating element
- Can be floor or vertically wall mounted
- Vortex, long life, stay clean heating element technology
- 100% efficiency throughout the product life
- Silent operation

TECHNICAL DRAWINGS

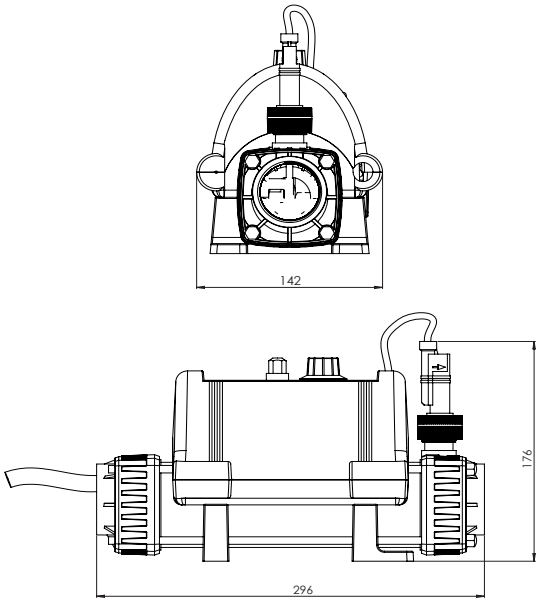

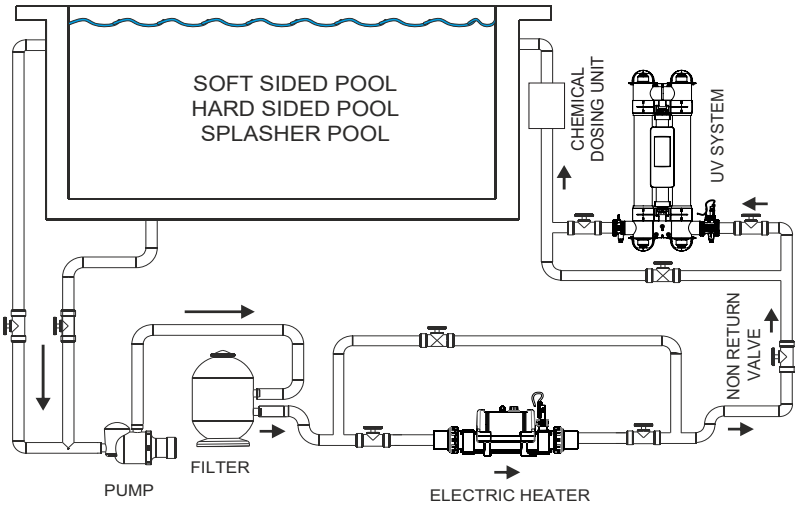

PRESSURE DROP

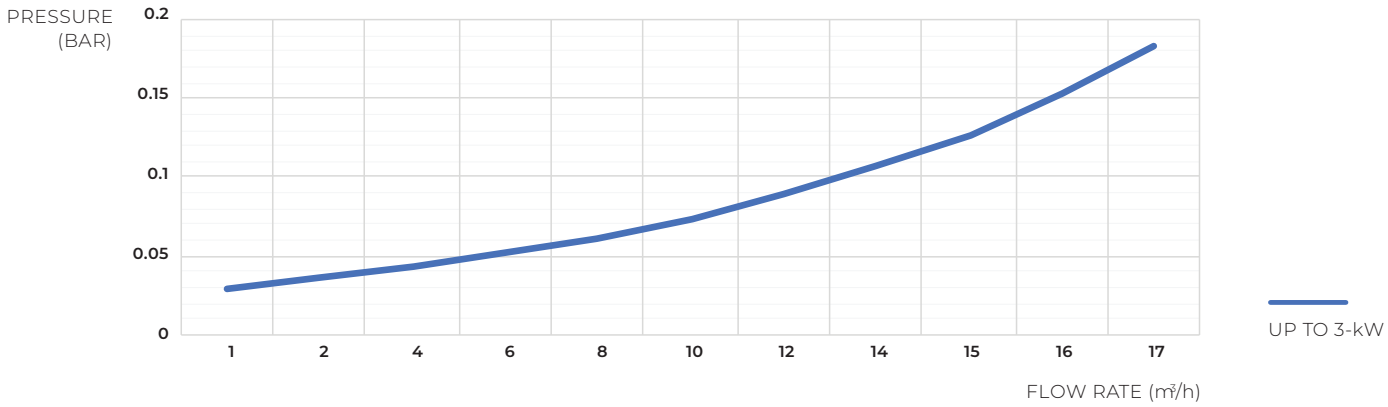

SPECIFICATIONS

POWER SUPPLY	220-240V single phase
FLOW REQUIREMENTS	Minimum flow: 1m³/h Maximum flow: 17m³/h
HEATING ELEMENT	Grade 1 titanium
FLOW TUBE	Grade 1 titanium
CONTROL THERMOSTAT	Analogue: 0 > 45°C (1.2°C differential)
SAFETY THERMAL CUT OUT	60°C (manual reset)
FLOW SWITCH	Rhodium tipped reed switch with titanium fulcrum pin
RELAY	Surface mount DPDT Finder 66.82.8.230.0000
SEALS	High temperature special formula EPDM ferrules, TPE end fitting gaskets
WATER CONNECTIONS	1.5" BSP female thread supplied with 1½" / 50mm stepped ABS unions for rigid pipe and 1½" / 1¼" stepped hose tails for flexible pipe
INTERNATIONAL PROTECTION MARKING	IP44
FREQUENCY	50/60 Hz
WORKING PRESSURE	4 bar maximum
MOUNTING	Floor or wall mounting

MODELS

220-240V 1-PHASE	LOAD	PRODUCT CODES		NET WEIGHT	GROSS WEIGHT	VOLUME
Power Output	Amp	UK Plug (Type G)	Euro Plug (Type F)	kg	kg	m³
2-kW	8.5	N-AGP-UK-T2	N-AGP-EU-T2	2.83	3.54	0.0195
3-kW	12	N-AGP-UK-T	N-AGP-EU-T	2.83	3.54	0.0195