SPARE PARTS

7025376 - NORSUP UV SUPERNOVA

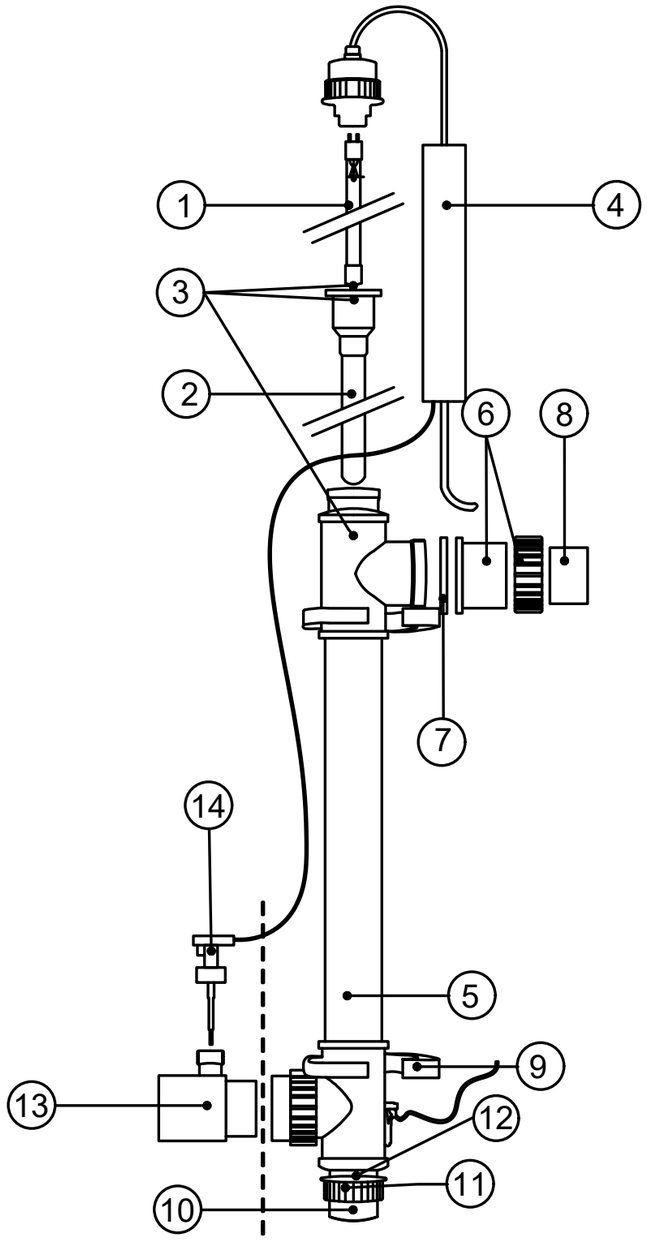

7025376 - NORSUP UV SUPERNOVA

NR.	DESCRIPTION	PART NR.
1a	Norsup Lamp Supernova (Timer) 80W	7025380
2a	Quartz Glass VSC 933 x 25 mm for Norsup Supernova (Timer) 80W	7025562
3	Set O-rings for Quartz glass	
4a	Electrics for Norsup Supernova 80W	7025564
4.1	Safety switch UV-C lights	7029159
5a	Housing Supernova (Timer) 80W	7028713
6	Set (2pcs) 2/3 union coupler 63mm	7028715
7	Set (2pcs) O-ring for coupler 63mm	7028716
8	Short reducer 63mm x 50mm/1 1/2" female thread	7028717
9	Installation grip 75mm	7028718
10a	Closure 26mm	7028719
11	Threaded nut for closure	7028721
12	O-ring for closure EPDM 59,99x2,62	7028722
13	Long reducer 63mm spigot x 63mm socket with 3/4" flow switch connection	7028723