Electric heater Aqua compact

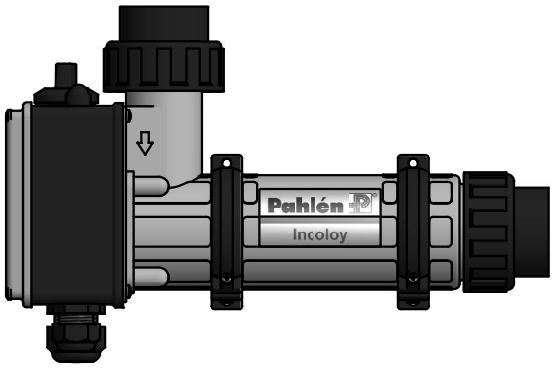

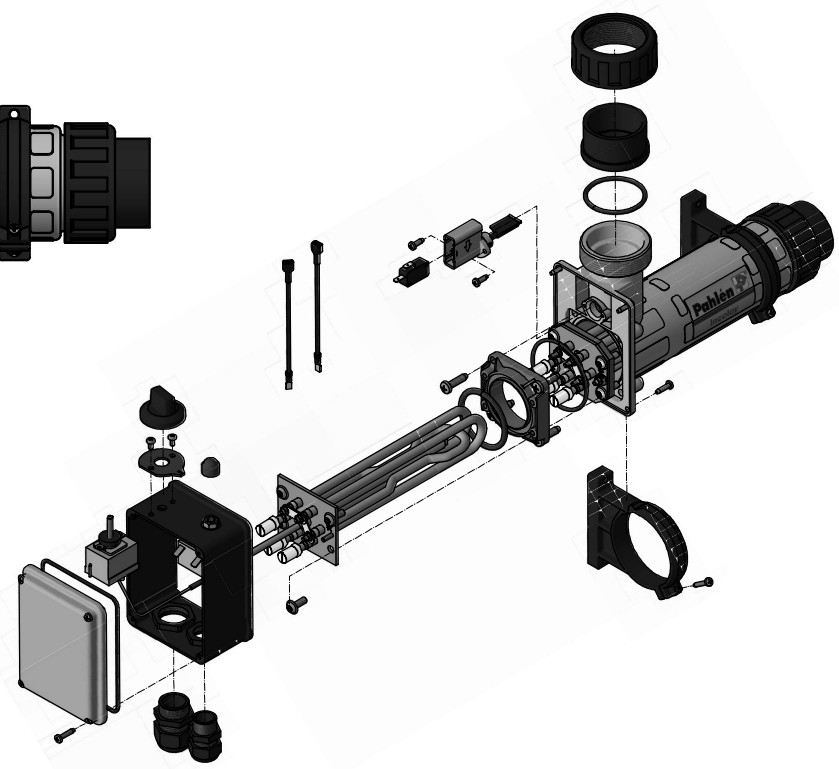

3-phase 400V AC

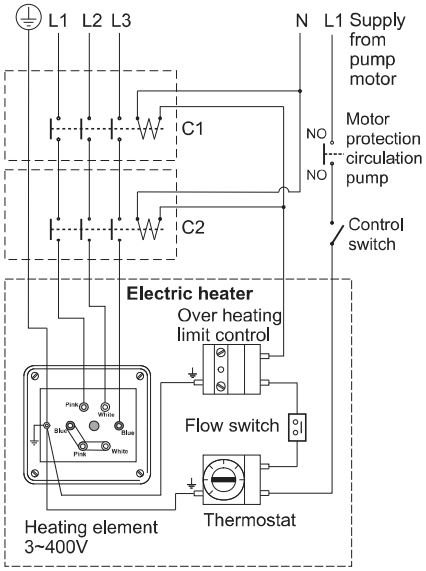

3-phase 230V

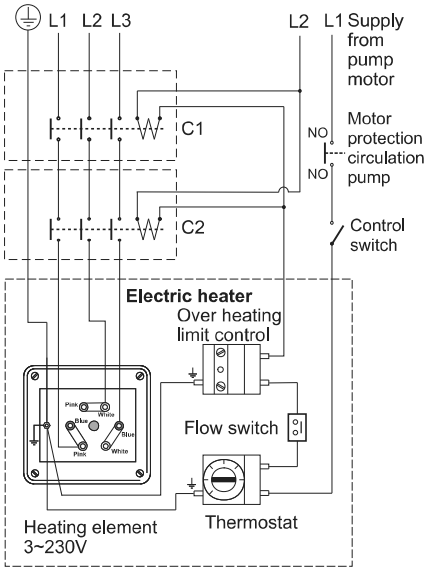

1-phase 230V

