FAIRLAND®

INVERX JUMBO



SUMMARY

INSTRUCTIONS FOR USE…… P.3-P.11

1. GENERAL INFORMATION ..... - 3 -

1.1. Contents ..... - 3 -

1.2. Operating conditions and range ..... - 4 -

1.3. Advantages of different modes ..... - 4 -

1.4. Kind reminder ..... - 4 -

2. OPERATIONS ..... - 6 -

2.1. Notice before using ..... - 6 -

2.2. Operation instructions ..... - 6 -

2.3. Advanced application ..... - 8 -

2.4. Daily maintenance and winterizing ..... - 10 -

3. TECHNICAL SPECIFICATION ..... - 10 -

INSTALLATION AND MAINTENANCE…… P.12-P.24

1. TRANSPORTATION ..... - 12 -

2. INSTALLATION AND MAINTENANCE ..... - 13 -

3. TROUBLE SHOOTING FOR COMMON FAULTS ..... - 20 -

4. FAILURE CODE ..... - 21 -

APPENDIX : HEATING PRIORITY WIRING DIAGRAM (OPTIONAL) ..... - 22 -

CE Declaration of conformity 24

PLEASE READ IT CAREFULLY AND KEEP IT FOR SUBSEQUENT USE

This manual provides you necessary information for optimal use and maintenance

This appliance is not intended for use by persons (including children) with reduced physical, sensory or mental capabilities, or lack of experience and knowledge, unless they have been given supervision or instruction concerning use of the appliance by a person responsible for their safety.



Warning:

a. Please read the following tips before installation, use and maintenance.
b. Installation, removal and maintenance must be carried out by Professional in accordance with the instructions.
c. Gas leakage test must be done before and after installation.



Warning: flammable material .



Read operator's manual .



Operator's manual: operating instructions.



Service indicator: read technical manual.

1. Use

a. It must be installed or removed by professionals, and it is forbidden to dismantle and refit without permission.
b. **Don’t put obstacles before the air inlet and outlet of the heat pump.**

2. Installation

a. This product must be kept away from any source of fire.



b. The installation can’t be in a closed environment or indoors, and must be kept well ventilated.

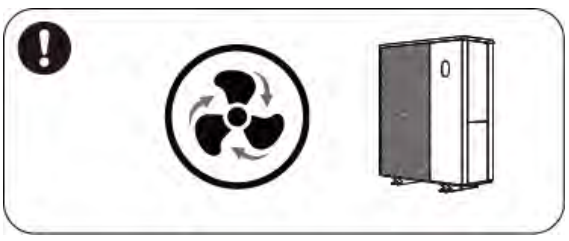

c. Vacuum completely before welding, field welding is not allowed, welding can only be performed by professional personnel in professional maintenance center.

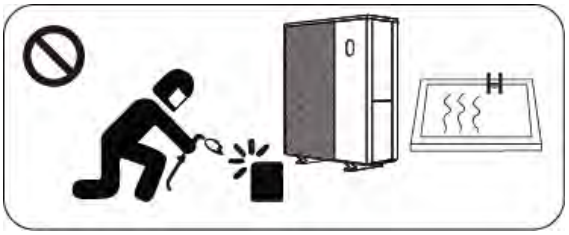

d. Installation must be stopped if any gas leakage, and the unit must be returned to professional maintenance center.

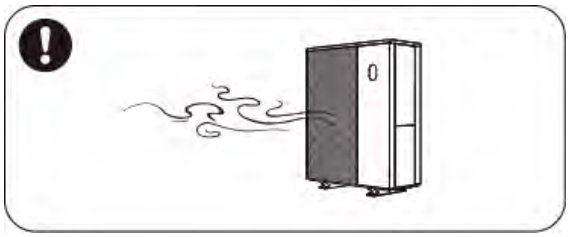

3. Transportation and Storage

a. Sealing is not allowed during transportation
b. Transporting goods at a constant speed is needed to avoid sudden acceleration or sudden braking, so as to reduce the collision of goods.
c. The unit must be far away from any source of fire.
d. Storage place must be bright, wide, open and good ventilation, ventilation equipment is required.

4. Maintenance Notice

a. If maintenance or scrap is required, contact an authorized service center nearby
b. Qualification requirement
   All operators who dispose gas must be qualified by valid certification which issued by professional agency.
c. Please strictly comply with the requirement from manufacturer when maintenance or filling gas. Please refer to the technical service manual.

1. GENERAL INFORMATION

1.1. Contents

After unpacking, please check if you have all the following components.

JBR150T

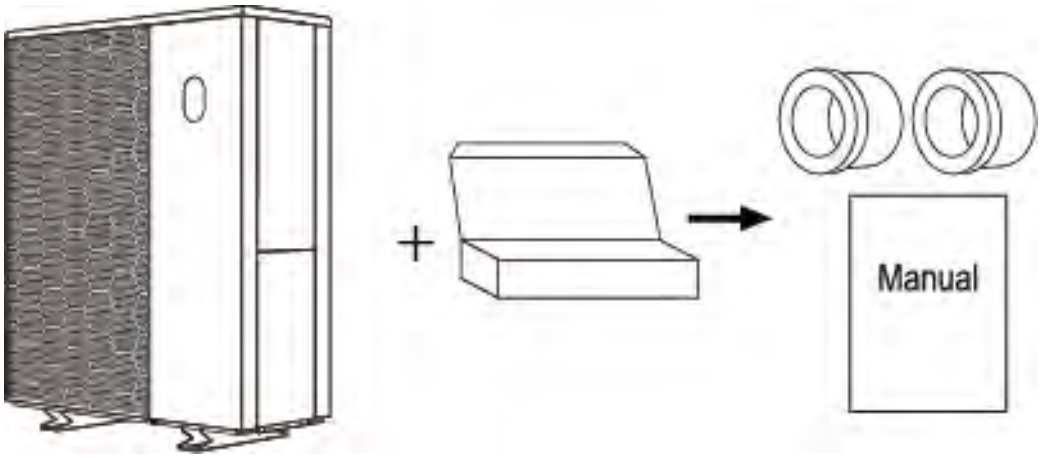

JBR300T

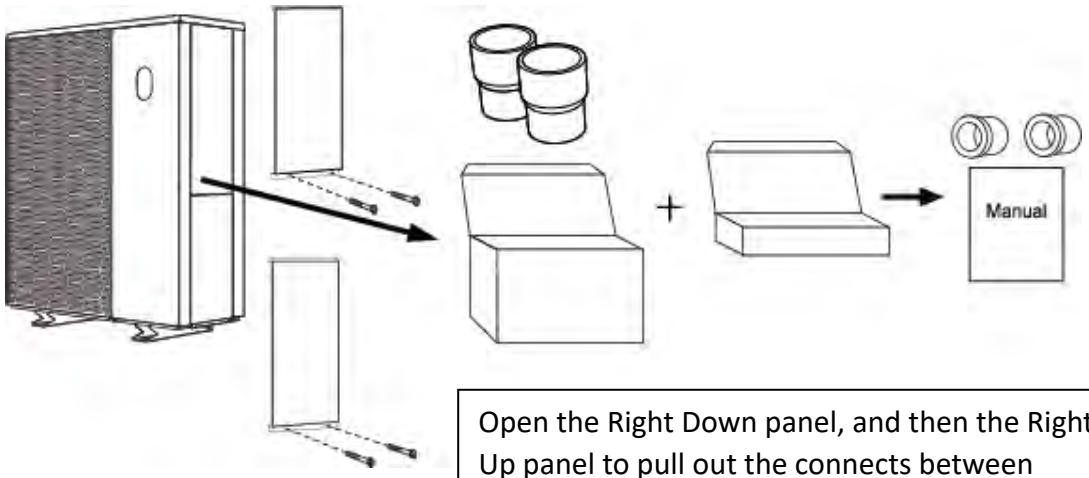

Open the Right Down panel, and then the Right Up panel to pull out the connects between water union and pipe.

NOTICE:

Please install the water unions step by step.

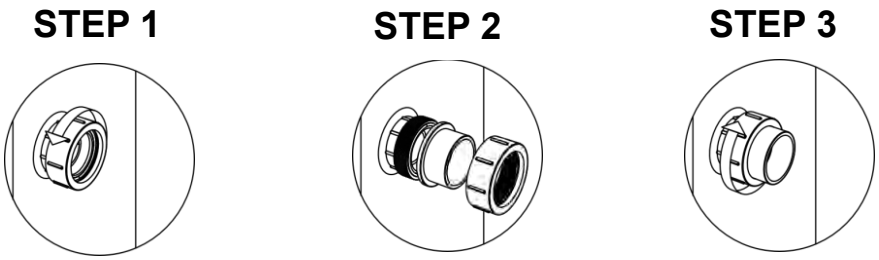

1.2. Operating conditions and range

ITEMS		RANGE
Operating range	Air temp	-20°C~43°C
Temp. setting	heating	18°C~40°C

The heat pump will have ideal performance in the operation range Air 15°C~25°C.

1.3. Advantages of different modes

The heat pump has three modes: Turbo, Smart and Silence. They have different advantages under different conditions.

MODE	ADVANTAGES
Turbo mode	Heating capacity: 120%~20% Fast heating, intelligent optimization according to ambient temperature and water temperature Energy efficiently saving
Smart mode	Heating capacity:100%~20% Intelligent optimization according to ambient temperature and water temperature Energy efficiently saving
Silence mode	Heating capacity: 60%~20% Use at night

1.4. Kind reminder

⚠ **In case of power failure during the operation of the machine, the machine will automatically restart when the power is restored.**

1.4.1. The heat pump can only be used to heat the pool water. It can NEVER be used to heat other flammable or turbid liquid.

1.4.2. Don’t lift the water unions when moving the heat pump since the titanium heat exchanger inside the heat pump will be damaged.



1.4.3. Don’t put obstacles before the air inlet and outlet of the heat pump.

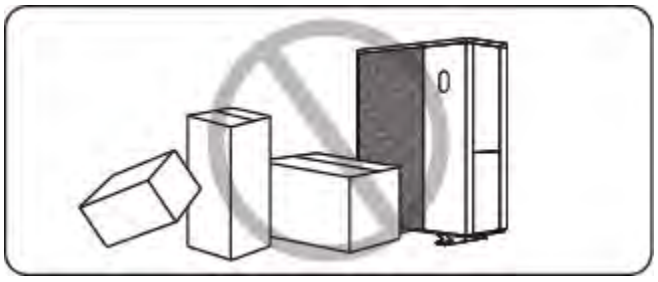

1.4.4. Do not put anything into the inlet or outlet, and do not remove the fan cover and the running fan to avoid injury.



1.4.5. Don’t use or store combustible gas or liquid such as thinners, paint and fuel to avoid fire.

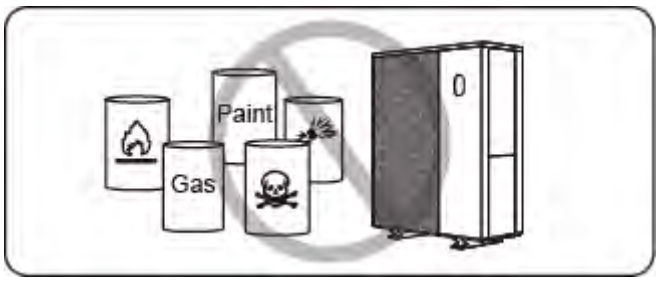

1.4.6. If any abnormal circumstances occurred, **e.g.: abnormal noises, smells, smokes and leakage of electricity, switch off the main power immediately and contact your local dealer.** Don’t try to repair the heat pump by yourselves.

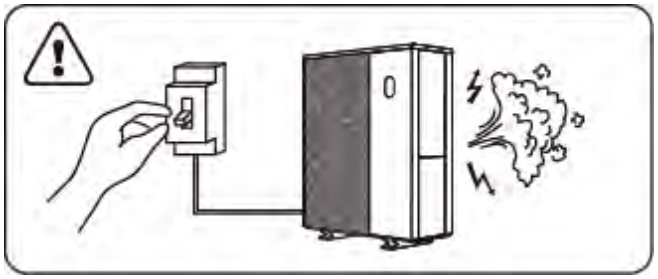

1.4.7. The main power switch should be out of the reach of Children.

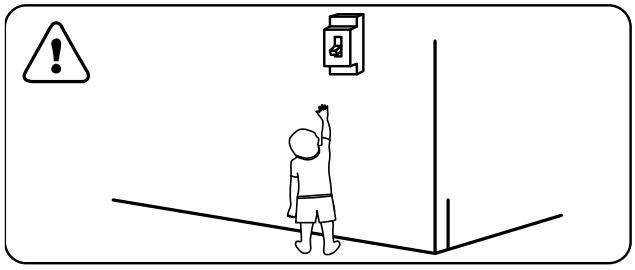

1.4.8. Please cut off the power in the lightning storm weather.

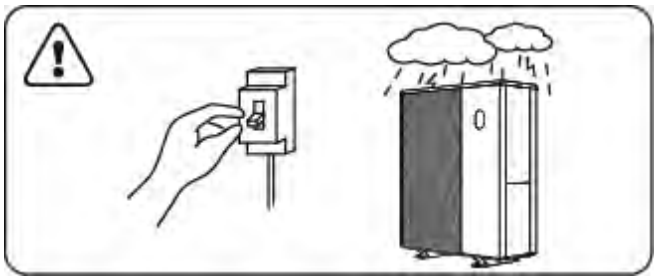

1.4.9. Please note that following codes are not failure.

	CODES
No water protection	E3
Anti-Freezing protection	Ed
Out of the operating range	Eb
Insufficient water flow protection	E6
Power abnormal	E5

2. OPERATIONS

2.1. Notice before using

2.1.1. For longer service life, please ensure water pump is on before heat pump starts to work, and water pump is off after heat pump is off.

2.1.2. Ensure no water leakage on piping system, then unlock screen and power on heat pump.

2.2. Operation instructions



INSTRUCTIONS FOR USE

SYMBOL	DESIGNATION	FUNCTION
	ON/OFF	1. Power On/Off 2. Wi-Fi setting
	Unlock	Press it for 3 seconds to unlock/lock screen
	Speed	Select Turbo/Smart/Silence mode
	Up / Down	Adjust set temperature

Note: Button will be light all the time when power is on.

① Screen lock:

a. If no operation in 30 seconds, screen will be locked.

b. When HP is off, screen will be dark and “0%” will be displayed.

c. Press for 3 seconds to lock screen and it will be dark.

② Screen unlock:

a. Press for 3 seconds to unlock screen and it will be lit up.

b. Only after screen is unlocked, any other buttons can be functioned.

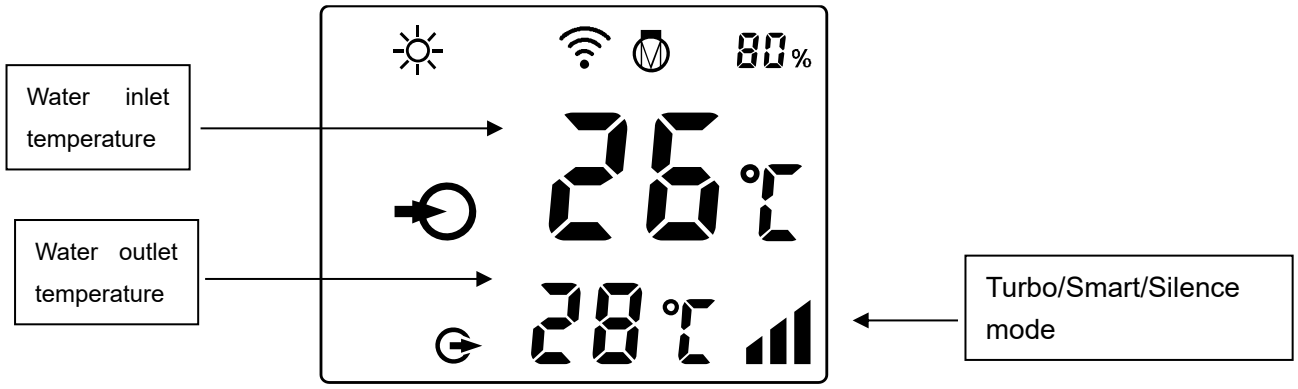

	Heating
80%	Heating capacity percentage
	Wifi connection
	Water inlet
	Water outlet

1. Power On: Press for 3 seconds to light up screen, then press to power on heat pump.

2. Adjust Set Temperature: When screen is unlocked, press ∧ or ∨ to display or adjust the set temperature.
3. Turbo/ Smart/Silence mode selection:

   Press to enter Turbo mode, and screen shows , then press to enter Silence mode, the screen shows . Press again, the screen shows and return to Smart mode.
4. Defrosting

a. Auto Defrosting: When heat pump is defrosting, will be flashing. After defrosting, will stop flashing.

b. Compulsory Defrosting: When heat pump is heating, press and ∨ together for 5 seconds to start compulsory defrosting, and will be flashing. After defrosting, will stop flashing.

   Note: Compulsory defrosting intervals should be more than 30 minutes and the compressor should run for more than 10 minutes at heating mode.
5. Temperature display conversion between °C and °F:
   Press "∧" and "∨" together for 5 seconds to switch between °C and °F.
6. Wifi connection

   Please kindly scan below QR code for Wi-Fi connection.

2.3. Advanced application

2.3.1. Parameter Checking

a. Press and ∧ together for 5 seconds to enter “Parameter Checking” status, the parameter code “P0” and the parameter value “0” will display on the screen, such as “P0 0”, which means water pump running way is continuous.
b. In “Parameter Checking” status, press ∧ or ∨ to check the parameters.

2.3.2. Parameter Modification

In “Parameter Checking” status, press to enter the “Parameter Modification” mode, press ∧ or ∨ to change the values, then press to confirm and quit “Parameter Modification” mode, press

to quit “Parameter Checking” status.

2.3.3. Parameter list

NO.	Content	Adjust range	Step length
P0	Water Pump Running Way	0: Continuous 1: Water temp control 2: Time/water temp control	1
P1	Time Setting (Only available when the water pump running way is set to “2”)	10 ~ 120 min	5 min
P2	Compressor Continuously Running Time between Defrosting Mode	30 ~ 90 min	1 min
P3	Defrosting Entry Temp	-17~0°C	1°C
P4	Maximum Defrosting Running Time	1 ~ 12 min	1 min
P5	Defrosting Exit Temp	8~30°C	1°C

2.3.4. Running status checking

Press for 5 seconds, enter into “Running status checking”, and the screen alternately shows status point “C0” and its corresponding value. Check all status points and their corresponding value through ^ or v, Press to quit “running status checking” mode.

Running status checking list

Symbol	Content	Unit
C0	Inlet water temp.	°C
C1	Outlet water temp.	°C
C2	Ambient temp.	°C

C3	Exhaust temp.	°C
C4	Outer coil pipe temp. (Evaporator)	°C
C5	Gas return temp.	°C
C6	Inner coil pipe temp. (Titanium heat exchanger)	°C
C9	Cooling plate temp.	°C
C10	Electronic expansion valve opening	P
C11	DC fan speed	(r/min)

2.4. Daily maintenance and winterizing

2.4.1. Daily Maintenance

Please don't forget to cut off power supply of the heat pump

- Please clean the heat pump with household detergents or clean water, NEVER use gasoline, thinners or any similar fuel.
- Check bolts, cables and connections regularly.

2.4.2. Winterizing

In winter season when you don't swim, please cut off power supply and drain water out of the heat pump. When using the heat pump under 2°C / 36°F, make sure there is always water flow.

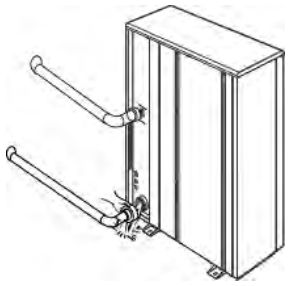

Attention:

Unscrew the lower water union of inlet pipe to let the water flow out.
When the water in machine freezes in winter season, the titanium heat exchanger may be damaged.

3. TECHNICAL SPECIFICATION

Model	JBR150T	JBR300T
Advised pool volume (m^3)	130~260	260~520
Operating air temperature (°C)	-20~43°C	
SCOP	**9.0**	**9.2**
Performance Condition: Air 26°C, Water 26°C, Humidity 80%		

Heating capacity (kW) in Turbo mode	60.0	120.0
Heating capacity (kW) in Smart mode	50.0	100.0
C.O.P in Smart mode	8.1	7.9
C.O.P	17.0~6.5	16.1~6.5
C.O.P at 50% capacity	11.1	11.0
Performance Condition: Air 15°C, Water 26°C, Humidity 70%		
Heating capacity (kW) in Turbo mode	42.0	82.0
Heating capacity (kW) in Smart mode	35.0	68.0
C.O.P in Smart mode	5.7	5.2
C.O.P	8.0~4.7	7.5~4.8
C.O.P at 50% capacity	7.0	6.8
Performance Condition: Air 7°C / 45°F, Water 26°C / 80°F, Humidity 90%		
Heating capacity (kW) in Turbo mode	32.5	62.0
Heating capacity (kW) in Smart mode	27.0	52.0
C.O.P in Smart mode	4.8	4.0
C.O.P in Turbo mode	4.0	3.7
Performance Condition: Air -15°C, Water 26°C, Humidity 70%		
Heating capacity (kW) in Turbo mode	21.0	42.0
C.O.P	3.0	3.1
Sound pressure at 1m dB(A)	42.1~54.4	43.3~58.5
Sound pressure of 50% capacity at 1m dB(A)	44.8	46.9
Sound pressure at 10m dB(A)	22.1~34.4	23.3~38.5
Power supply	400V 3N~, 50Hz	
Rated input power (kW) at air 15°C	1.4~8.94	2.6~17.1
Rated input current (A) at air 15°C	2.02~12.9	3.75~24.7
Advised water flux (m^3/h)	20~25	30~40
Water pipe in-out Spec (mm)	75	90
Net Dimension L × W × H (mm)	1545x458x1630	2108X640X2040
Net Weight (kg)	217	476
Gas (g)	4800	5200*2
GWP	675	
CO2 equivalent (tonnes)	3.240	7.020

- *The values indicated are valid under ideal conditions: Pool covered with an isothermal cover, filtration system running at least 15 hours a day.*
- *Related parameters subject to adjustment periodically for technical improvement without further notice. For details please refer to nameplate.*

1. TRANSPORTATION

1.1. When storing or moving the heat pump, the heat pump should be at the upright position.

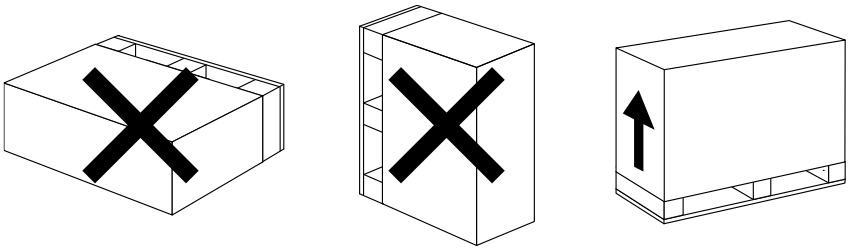

1.2. When moving the heat pump, do not lift the water unions since the titanium heat exchanger inside the heat pump will be damaged.



1.3. Before moving the heat pump, remove the screws which fixed on the pallet and remove the pallet.

（1）Remove the screws which fixed on the pallet

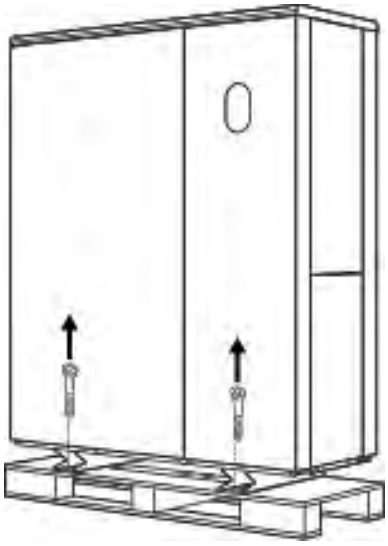

（2）Deliver with fork lift

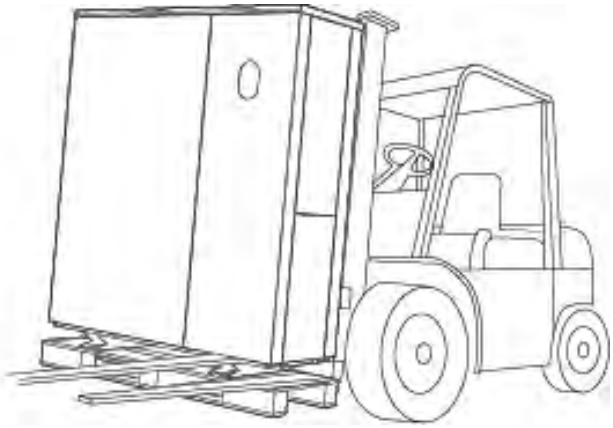

2. INSTALLATION AND MAINTENANCE

⚠ The heat pump must be installed by a professional team. The users are not qualified to install by themselves, otherwise the heat pump might be damaged and risky for users' safety.

2.1. Notice before installation

2.1.1. The inlet and outlet water unions **can't** bear the weight of soft pipes. The heat pump must be connected with hard pipes!

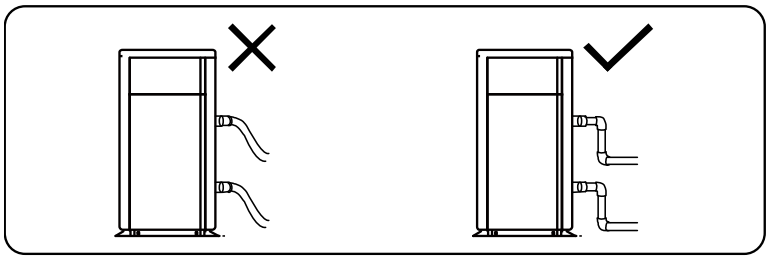

2.1.2. In order to guarantee the heating efficiency, the water pipe length should be ≤10mbetween the pool and the heat pump.

2.2. Installation instruction

2.2.1. Location and size

⚠To avoid air recirculation, the heat pump should be installed in a place with good ventilation or should reserve sufficient space for installation and maintenance. Please refer to the schema below:

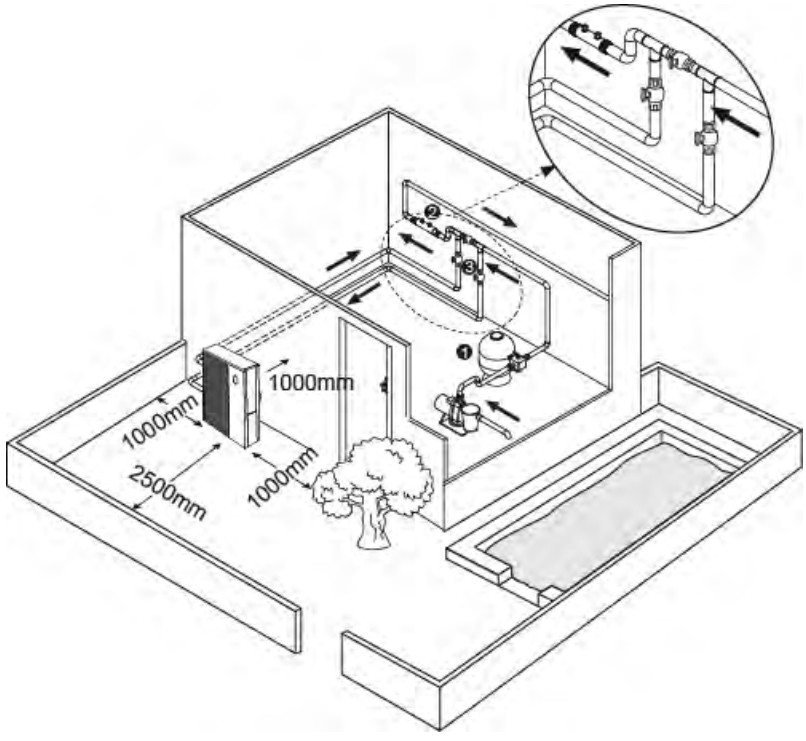

* MINIMUM DISTANCE
❶ Filter
❷ Water processor
❸ Water switch

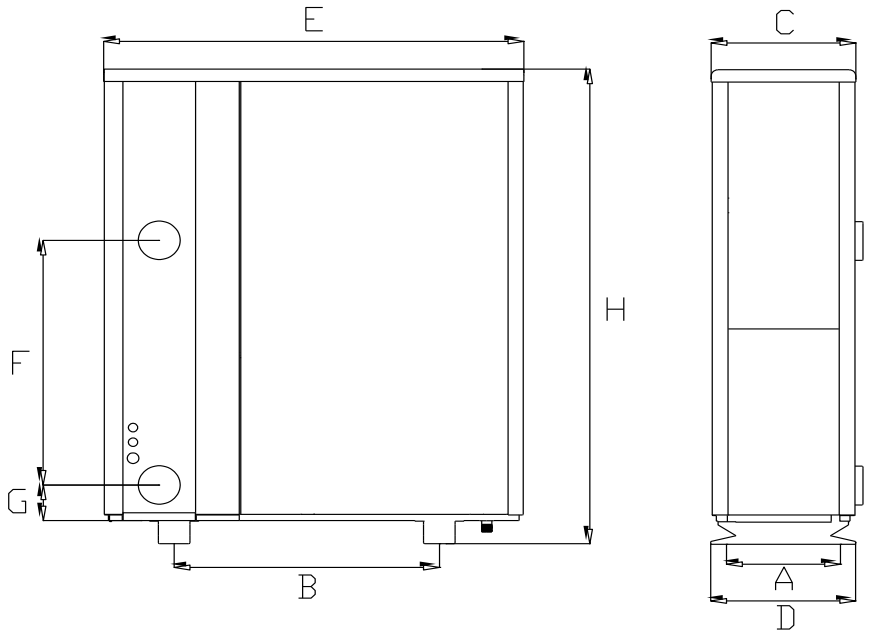

	UNIT=MM	A	B	C	D	E	F	G	H
MODEL	JBR150T	391	1055	458	459	1545	840	123	1630

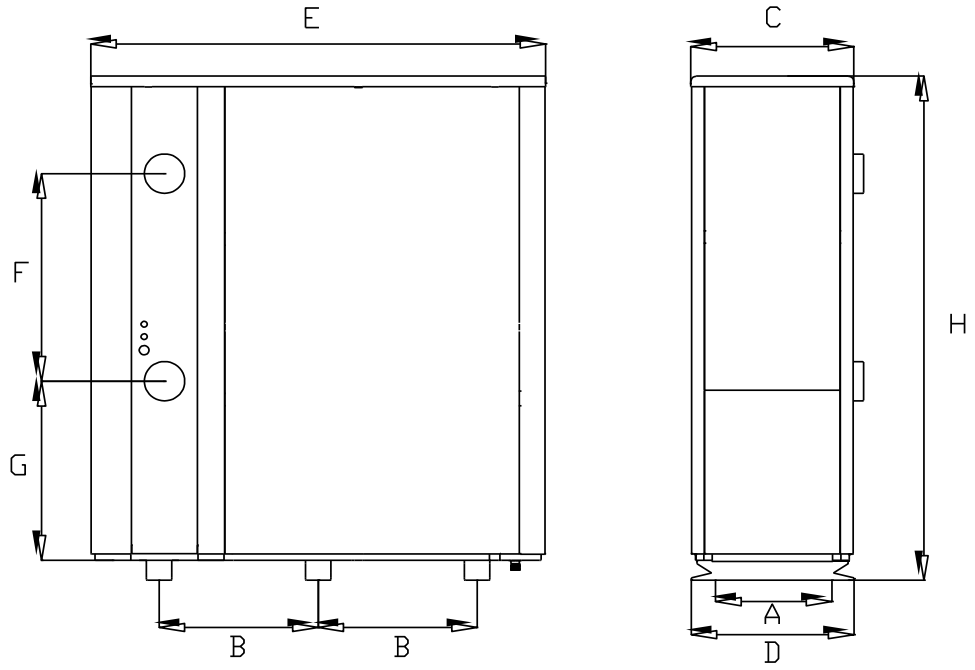

	UNIT=MM	A	B	C	D	E	F	G	H
MODEL	JBR300T	572	785	640	640	2108	840	700	2040

※ Above data is subject to modification without notice.

2.2.2. Heat pump installation.

- The frame must be fixed by bolts **(M10)** to concrete foundation or brackets. The concrete foundation must be solid; the bracket must be strong enough and anti-rust treated;
- The heat pump needs a water pump **(Supplied by the user)**. The recommended pump specification-flux: refer to Technical Parameter, Max. lift **≥10m**
- When the heat pump is running, there will be condensation water discharged from the bottom , please pay attention to it. DN 25 Pipe can be added into the hole if necessary (not standard) to drain off the condensation water.

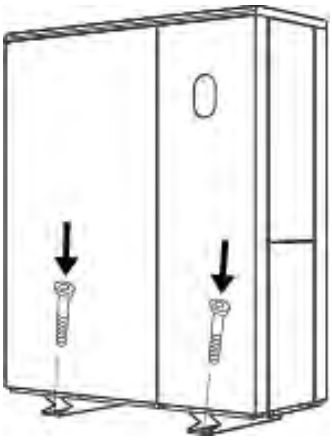

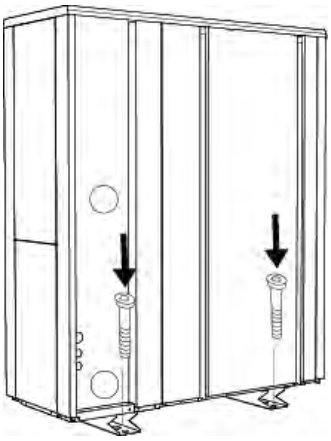

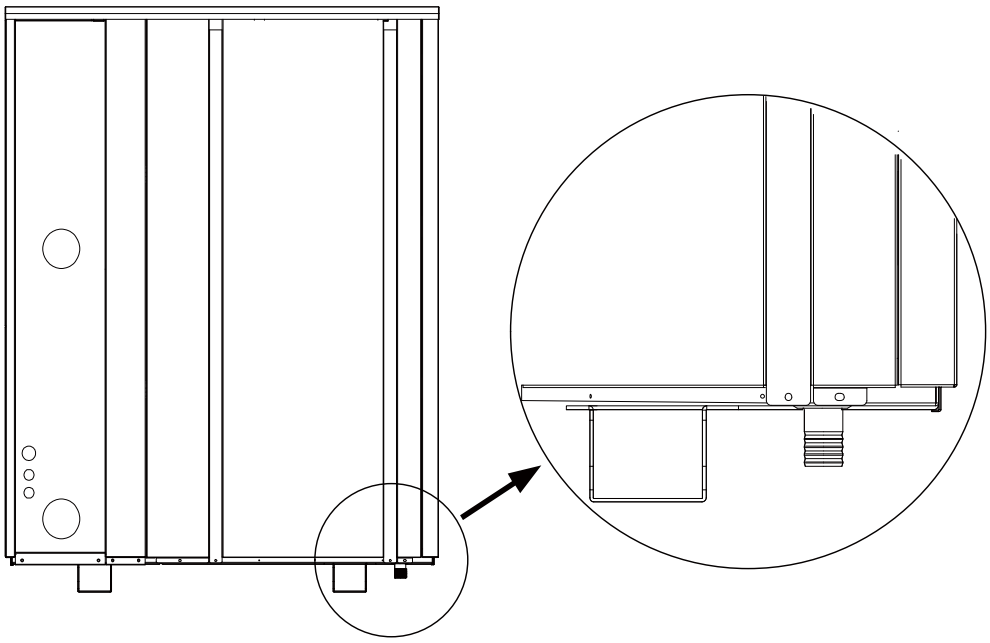

2.2.3. Wiring and protecting devices and cable specification

- Connect to appropriate power supply, the voltage should comply with the rated voltage of the products.
- Well earth the heat pump.
- Wiring must be connected by a professional technician according to the circuit diagram.
- Set breaker or fuse according to the local code (leakage operating current ≤ 30mA).
- The layout of power cable and signal cable should be orderly and not affecting each other. Considering the environmental conditions (ambient temperature, direct sunlight, rain, grid voltage, cable length, etc.), the cross-sectional area of the cable can be appropriately increased.

- If you use green energy to power this equipment, please make sure the power supply voltage is stable and the voltage range is within the range indicated on the equipment. Unstable voltage or voltage range beyond the indicated value will easily cause damage to the machine.

2.2.4. Connecting your power wire

JBR150T

① Remove the screws

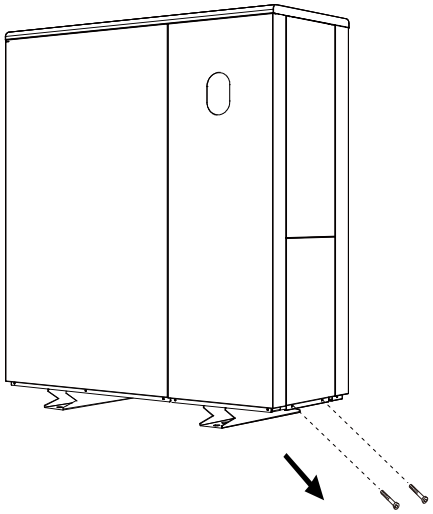

② Open the Right Down panel and the internal cover

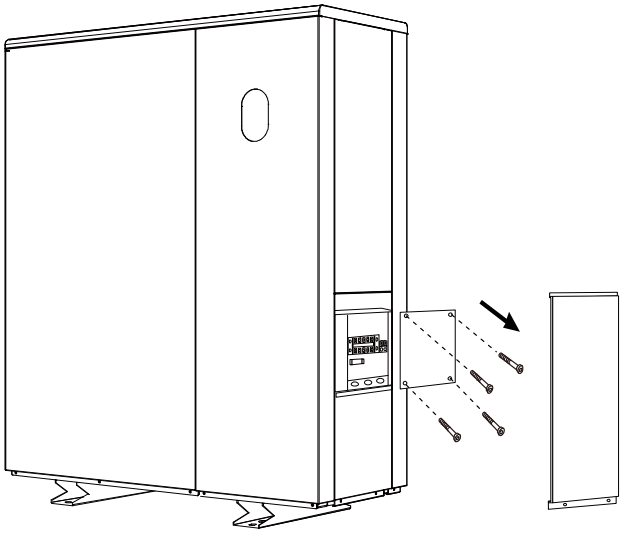

③ Connect the power wire according to the electrical diagram.

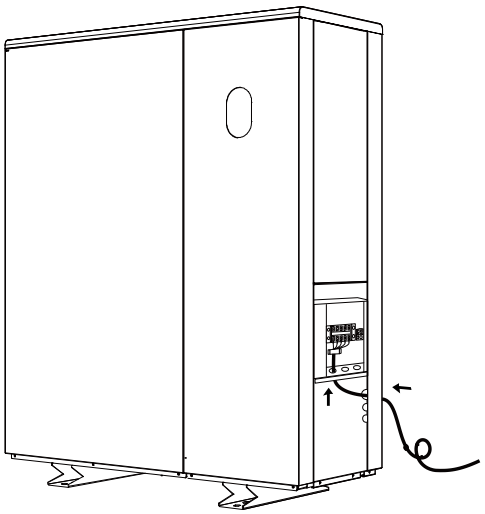

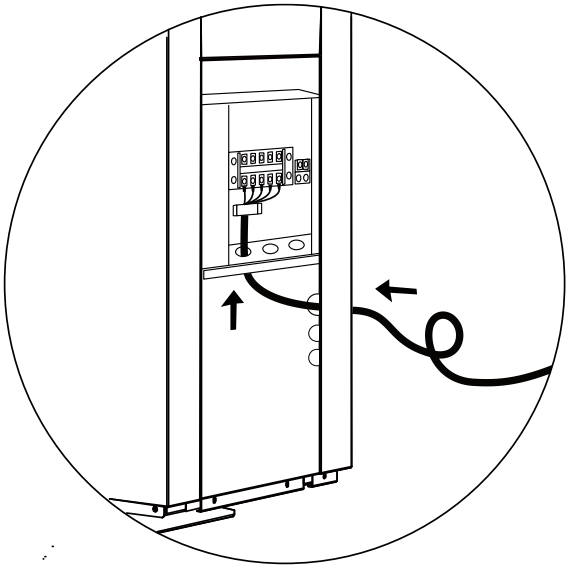

④Install the internal cover and right down panel

⑤ Tighten the screws

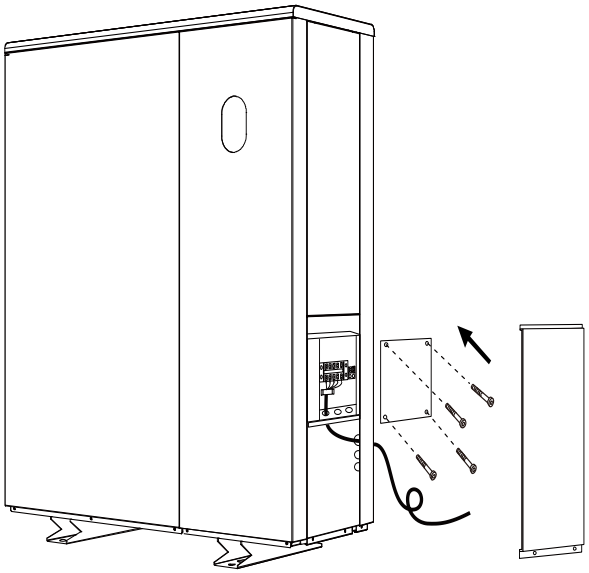

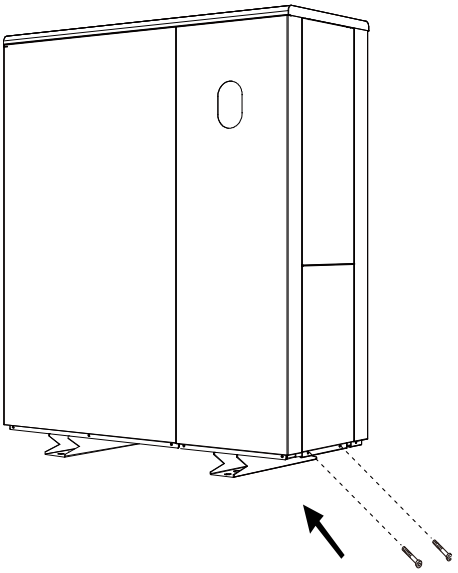

JBR300T

① Remove the screws

② Open the Right Down panel

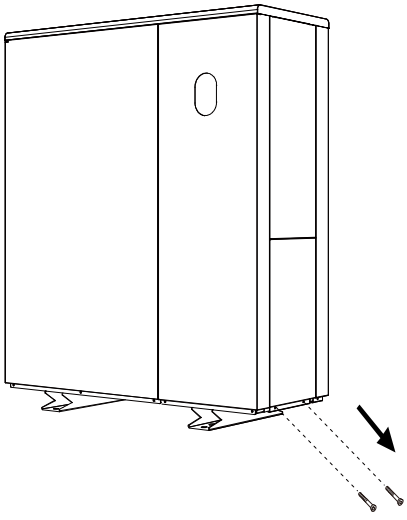

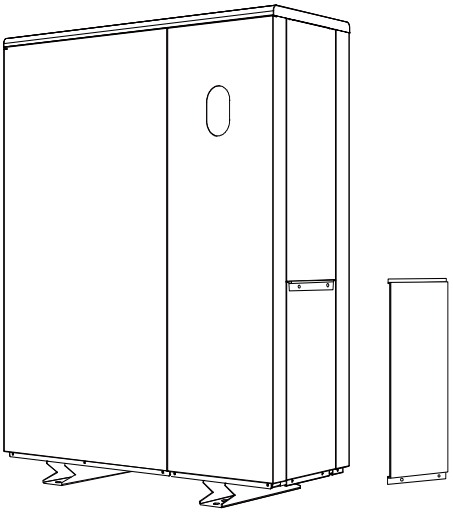

③Open the Right Up panel and the internal cover

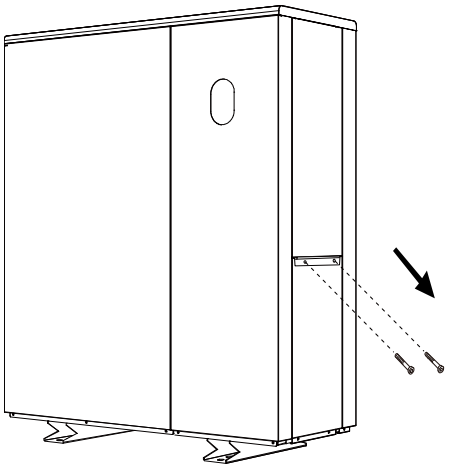

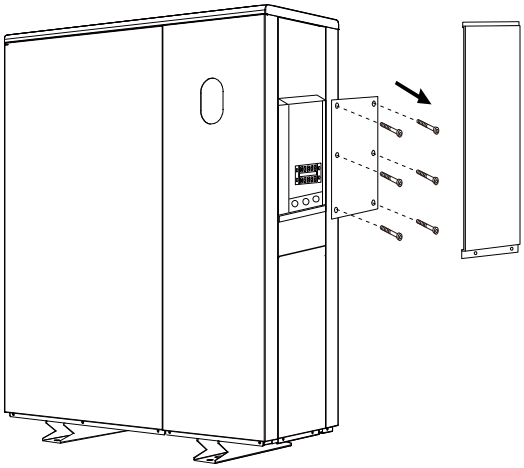

④Connect the power wire according to the electrical diagram.

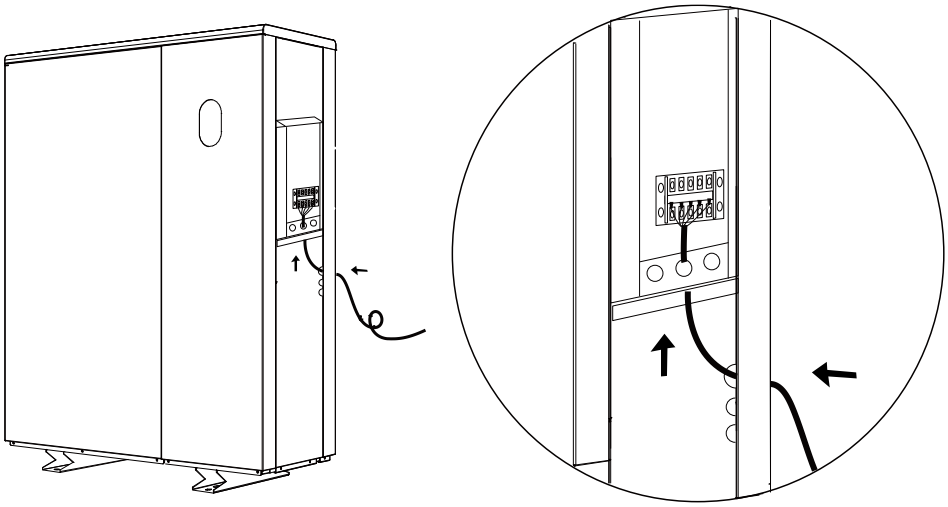

⑤Install the internal cover and panels

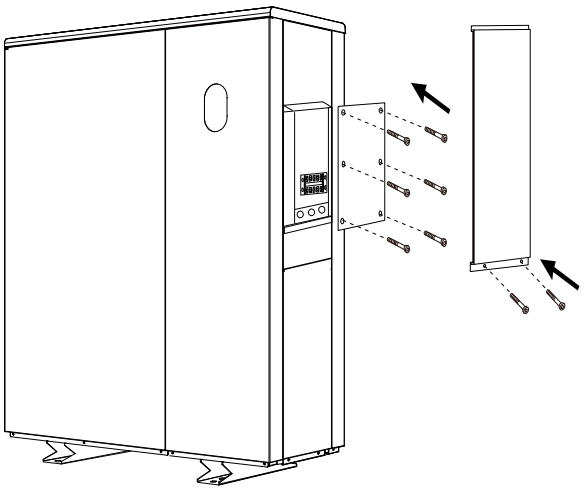

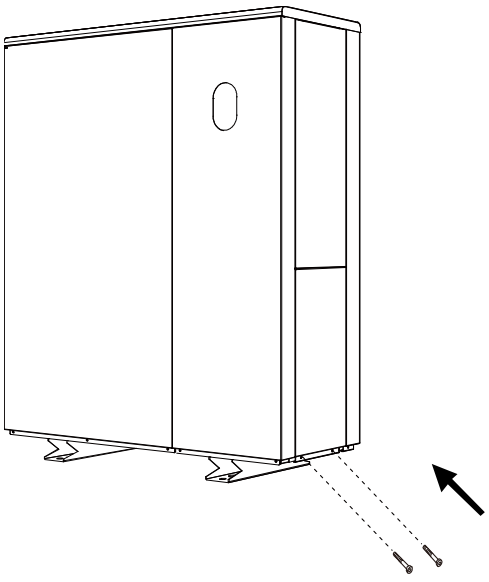

2.2.5. Wiring diagram

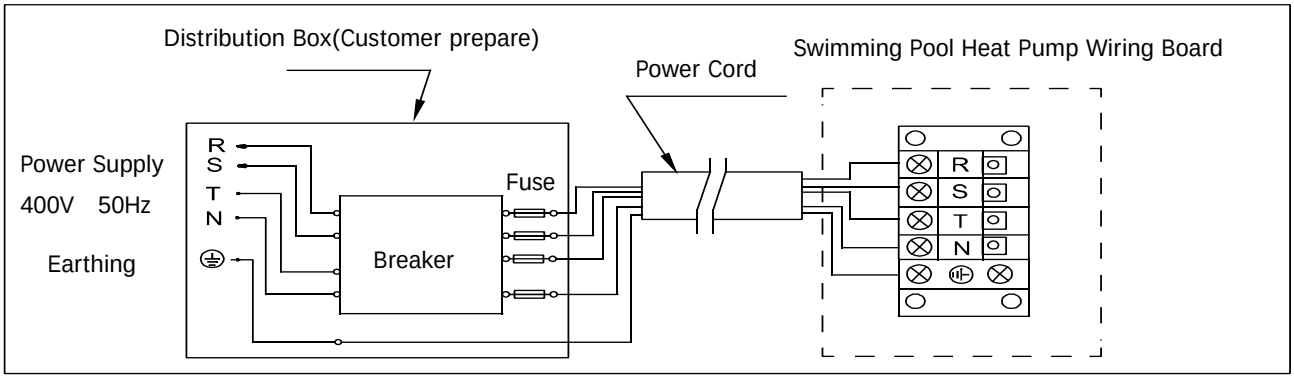

NOTE：

- The wiring circuit: please make sure that the leakage protection switch has been installed.
- If the machine itself does not come with a plug power cord, you must use the hard-wired way to connect the power supply, not allowed to connect plugs.
- If the machine itself comes with a plug, please make sure that the plug and socket with good waterproof measures.

- For your safe use in winter, it's strongly recommended to equip heating priority function or auto function.
- For the detailed wiring diagram, please refer to Appendix 1.

3. Options for protecting devices and cable specification

MODEL		JBR150T	JBR300T
Breaker	Rated Current (A)	25.0	50.0
	Rated Residual Action Current (mA)	30	30
Max input current (A)		19.0	42.0
Fuse (A)		25.0	50.0
Power Cord (mm^2)		5×4	5×10
Signal cable (mm^2)		3×0.5	3×0.5

NOTE: The above data is adapted to power cord ≤ 10m.If power cord is ＞10m, wire diameter must be increased.

2.3. Trial after installation

Please check all the wirings carefully before turning on the heat pump.

2.3.1. Inspection before use

- Check installation of the whole heat pump and the pipe connections according to the pipe connecting drawing;
- Check the electric wiring according to the electrical wiring diagram and earthing connection;
- Make sure that the main power is well connected;
- Check if there is any obstacle in front of the air inlet and outlet of the heat pump

2.3.2. Trial

- Water pump should start before the heat pump, and turn off after the heat pump for long life.
- After the water pump starts, please make sure no leakage of water. Then power on and press the ON/OFF button of the heat pump, and set desired temperature.
- In order to protect the heat pump, the heat pump is equipped with start delay function. When starting the heat pump, the fan will start to run in 3 minutes, in another30 seconds, the compressor will start to run.
- After pool heat pump starts up, check for any abnormal noise from the heat pump.
- Check the temperature setting.

2.4. Maintenance and winterizing

2.4.1. Maintenance

⚠The maintenance should be carried out once per year by qualified professional technician.

- Cut off power supply of the heat pump before cleaning, examination and repairing . Do not touch the electronic components until the LED indication lights on PC board turn off.

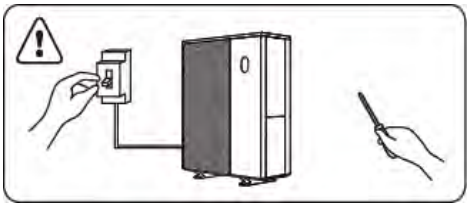

- Please clean the evaporator with household detergents or clean water, NEVER use gasoline, thinners or any similar fuel.
- Check bolts, cables and connections regularly.

2.4.2. Winterizing

In winter season when you don't swim, please cut off power supply and drain water out of the heat pump. When using the heat pump under 2°C / 36°F, make sure there is always water flow.

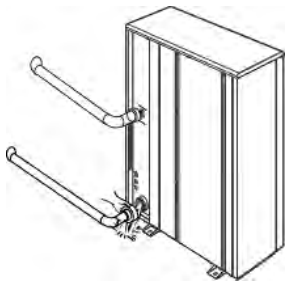

⚠ Attention:

Unscrew the lower water union of inlet pipe to let the water flow out. When the water in machine freezes in winter season, the titanium heat exchanger may be damaged.

3. TROUBLE SHOOTING FOR COMMON FAULTS

FAILURE	REASON	SOLUTION
Heat pump doesn't run	No power	Wait until the power recovers

	Power switch is off	Switch on the power
	Fuse burned	Check and change the fuse
	The breaker is off	Check and turn on the breaker
Fan running but with insufficient heating	evaporator blocked	Remove the obstacles
	Air outlet blocked	Remove the obstacles
	3 minutes start delay	Wait patiently
Display normal, but no heating	Set temp. too low	Set proper heating temp.
	3 minutes start delay	Wait patiently
If above solutions don't work, please contact your installer with detailed information and your model number. Don't try to repair it yourself.		

ATTENTION！Please don't try to repair the heat pump by yourself to avoid any risk

4. FAILURE CODE

NO.	DISPLAY	NOT FAILUREDESCRIPTION
1	**E3**	No water protection
2	**E5**	Power supply excesses operation range

3	**E6**	Excessive temp difference between inlet and outlet water(Insufficient water flow protection)
4	**Eb**	Ambient temperature too high or too low protection
5	**Ed**	Anti-freezing reminder
6	**OFF**	Customer Control Switch DIN2 Disconnect
NO.	**DISPLAY**	**FAILUREDESCRIPTION**
1	**E1**	High pressure protection
2	**E2**	Low pressure protection
3	**E4**	Phases lack protection (three phase model only)
4	**E7**	Water outlet temp too high or too low protection
5	**E8**	High exhaust temp protection
6	**EA**	Evaporator overheat protection (only at cooling mode)
7	**P0**	Controller communication failure
8	**P1**	Water inlet temp sensor failure
9	**P2**	Water outlet temp sensor failure
10	**P3**	Gas exhaust temp sensor failure
11	**P4**	Evaporator coil pipe temp sensor failure
12	**P5**	Gas return temp sensor failure
13	**P6**	Cooling coil pipe temp sensor failure
14	**P7**	Ambient temp sensor failure
15	**P8**	Cooling plate sensor failure
16	**P9**	Current sensor failure
17	**PA**	Restart memory failure
18	**F1**	Compressor drive module failure
19	**F2**	PFC module failure
20	**F3**	Compressor start failure
21	**F4**	Compressor running failure
22	**F5**	Inverter board over current protection
23	**F6**	Inverter board overheat protection
24	**F7**	Current protection
25	**F8**	Cooling plate overheat protection
26	**F9**	Fan motor failure
27	**Fb**	Capacitor no charging protection
28	**FA**	PFC module over current protection
29	**8888**	Communication failure

APPENDIX : HEATING PRIORITY WIRING DIAGRAM (OPTIONAL)

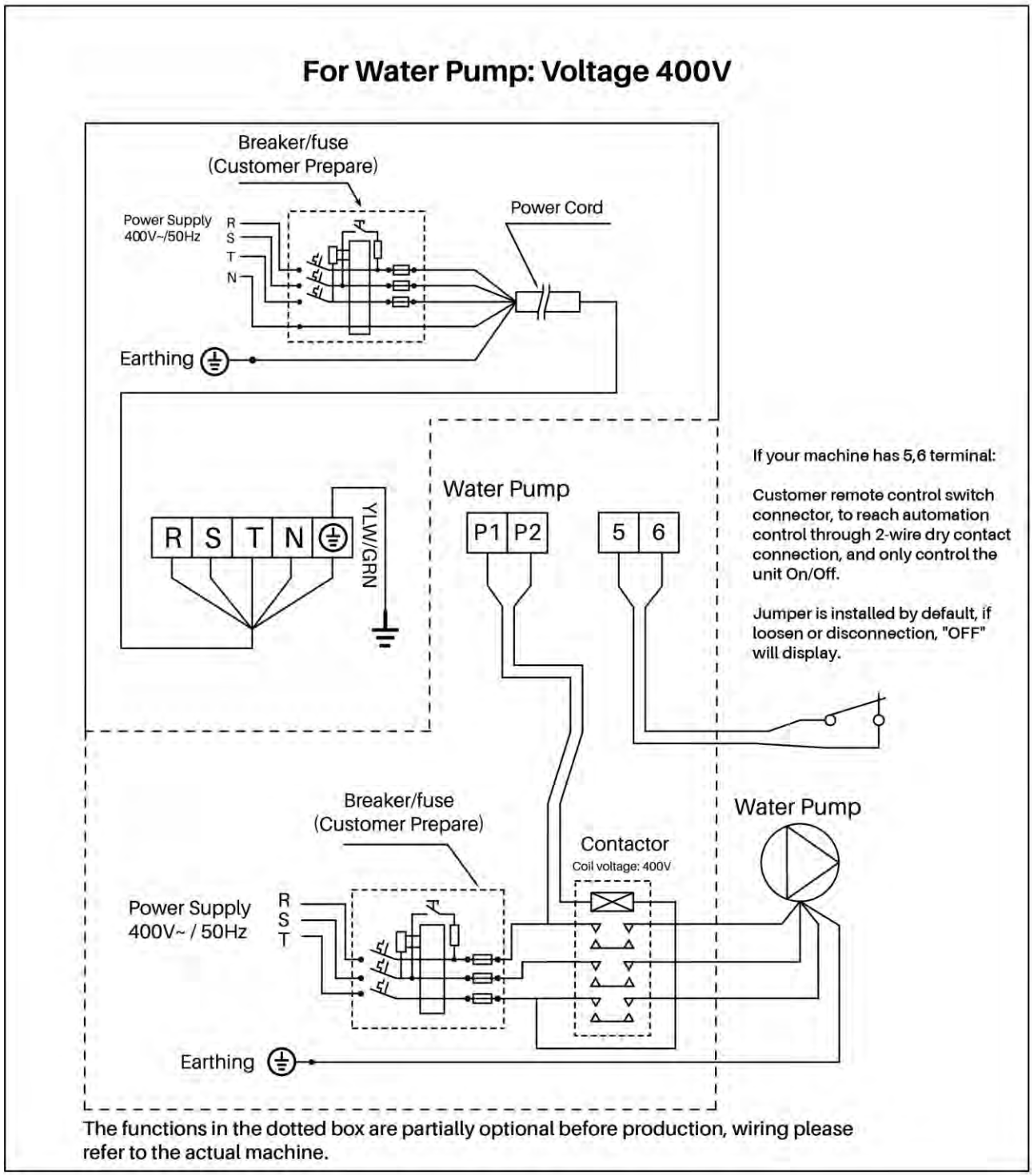

Parallel connection with filtration timer

If the user wants to connect the water pump timer, the installer should connect water pump timer and water pump wiring of heat pump in parallel. So that water pump can start when water pump timer or water pump wiring of heat pump is connected, and water pump will only be switched off when both are disconnected at the same time.

CE Declaration of conformity

The manufacturer declares that the following product complies with the appropriate basic safety according to the CE directives based on its design and type

Product Description: swimming pool heat pump

Manufacturer's model Ref	Customer's model Ref.
JBR150T	JBR150T
JBR300T	JBR300T

Manufacturer declares that above designated product is designed according to bellow Directives.

Applicable EC Directives:
Low voltage Directive (2014 /35/EU)
EC Council Directive (2014/30/EU)

FAIRLAND ELECTRIC CO., LTD
2024-10-09

Thank you for choosing TurboSilence Inverter.

The factory reserves the final interpretation right.

And keep the right to stop or change product specification and design without prior notice at any time, no need to bear the resulting obligations.



Version：H02IWB