2/2-Weg Magneetventiel

T-Serie

VALVE TYPE: PILOT OPERATED

Function	: normally closed, NC
Construction	: diaphgram
Pressure range	: 0,2 - 16 bar max., see tabel
Material	: brass with stainless steel inner parts
Seal	: NBR standard, viton of EPDM optional
Ambient temp.	: max. +35°C
Medium temp.	: -10 upto +90°C (NBR - 21W.KB...)
	-10 upto +140°C (Viton - 21W.KV...)
	-10 upto +140°C (EPDM - 21W.KE...)
Viscosity	: max. 12cSt / ~2°E
Supply voltage	: 230/50, 24/50
	24/=
	Other voltages on request
Enclosure	: Din 40050 / IP65
Medium	: neutral, gaseous and liquid
Connection	: 3/8 and 1/2" BSP
Installation	: solenoid in upright postion only



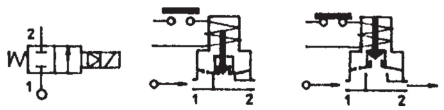

Valve, non-energised, closed by spring power - NC. When energised, the pressure decomposes on the secundary side of the piston. The pressure differential lifts the piston from the seat (orrifice) and the valve opens. There should always be a pressure differential, of at least 0,2 bar over the valve, to secure unproblematic operation.

Conn. BSP	Orifice in mm	Flow-rate l/min	Typenumber	Min. pressure (in bar)	Max. pressure (in bar)		Power in Watt
					AC Spoel	DC Spoel	
3/8"	13	60,0		0,2	16	16	8
1/2"	13	70,0		0,2	16	16	8

All technical specifications are given with best knowledge, no responsibility is accepted for the information stated!

Dimensional drawing standard type (dimensions in mm)

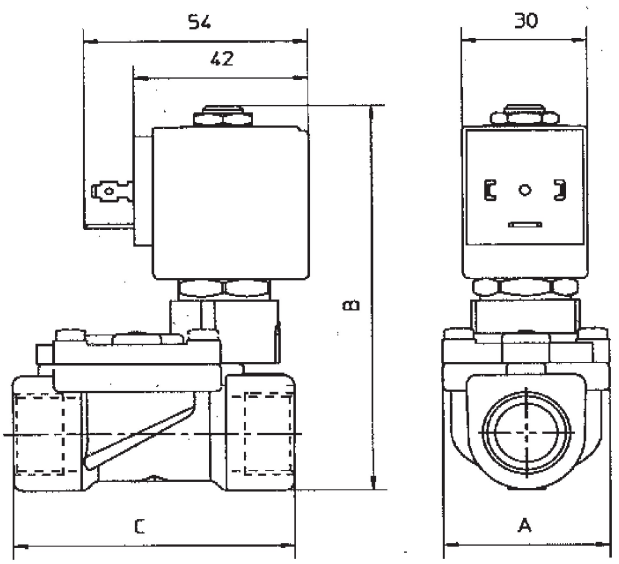

Type	Conn.	A	B	C
	3/8"	40	97	60
	1/2"	40	97	66

Power consumption		
Type	Rush VA~	Hold VA~
8 Watt	25	14,5

Parts

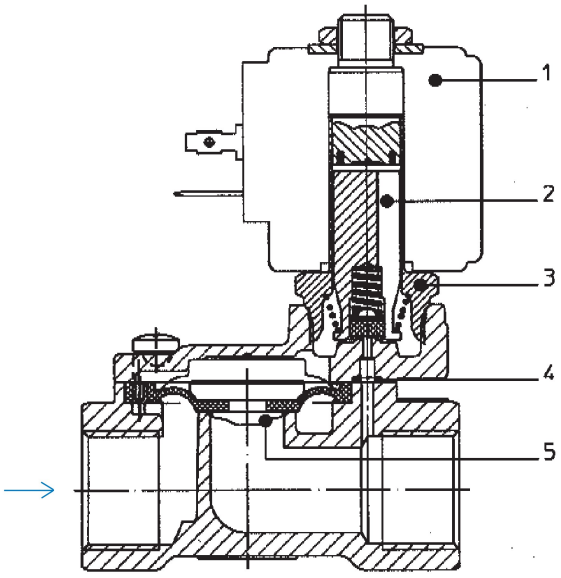

Pos nr.	Description	Code nr		
1	Coil	8 watt	8 watt	8 watt
2	Anchor complete	R450886/B	R450886/V	R450886/E
3	Tube compl.	R450606	R450606	R450606
4	O-ring	R990300/B	R990300/V	R990300/E
5	Diaphgram compl.	R452186/B	R452186/V	R452186/E