Pahlén®
swimming pool equipment

Swedish design
and manufacture
since 1967



Aqua HL

SE Manual
GB User manual
DE Gebrauchsanleitung
RU Инструкция
FR Manuel d'utilisation
SP Manual de instrucciónes
PL Instrukcja montazowa



MA45-11 rev.2
2017

Copyright © 2017 Pahlén AB, Box 728, SE-194 27 Upplands Väsby, Sweden
Tel. +46 8 594 110 50, Fax +46 8 590 868 80, e-mail: info@pahlen.se, www.pahlen.com

Electric heater Aqua HL line

The electric heater must be installed horizontally as shown on the drawing, so that it is always full of water. The heater must never be started or left switched on unless it is completely full of water (fire risk).
If the heater is positioned against combustible material, a fireproof panel or similar must be placed between the heater and the wall.
The panel must extend 10 cm outside the outer dimensions of the heater.
Do not cover the heater.
Dosage of chlorine, acid or similar, must be done after the heater to avoid corrosion.
The warranty is void if the heater has been incorrectly installed or used.
Important! The standard heater must not be used in aggressive water, salt water or for pools with a chlorinator/salt generator. In such circumstances an Electric heater Aqua HL line titanium is required.
“Persons with limited physical or mental capacity (including children) must not use the device without instructions on how to use it safely”, according to IEC 60335-1.

Technical data

Max temperature:	45°C
Max pressure:	2 bar
Min flow:	90 l/min

The product is intended for the following water values:

Chlorine content: max 3 mg/l (ppm)
pH-value: 7.2–7.6
Alkalinity: 60–120 mg/l (ppm)
Calcium hardness: 100–300 mg/l (ppm)

Aqua HL line
Chloride (salt) content: max 250 mg/l

Aqua HL line Titan
Chloride (salt) content: max 35 000 mg/l

Outside these values, the product warranty is void.

Dimensions

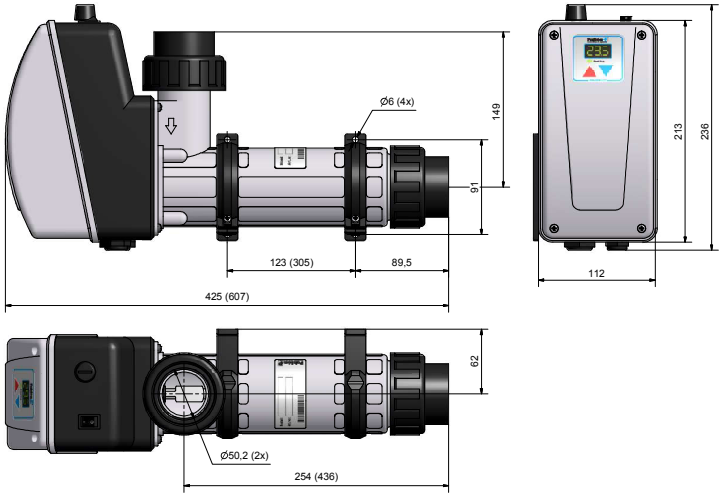

Pipe installation

The heater must be installed in the return line to the pool AFTER the filter; see the installation drawing.
Do not install a shut-off valve between the heater and the pool. If a valve is required, install a check valve. If there is a risk of freezing where the heater is located, the installation must allow all water to be drained from the heater.
The outlet of the electric heater must not be connected to any tap or coupling other than in accordance with the installation drawing.

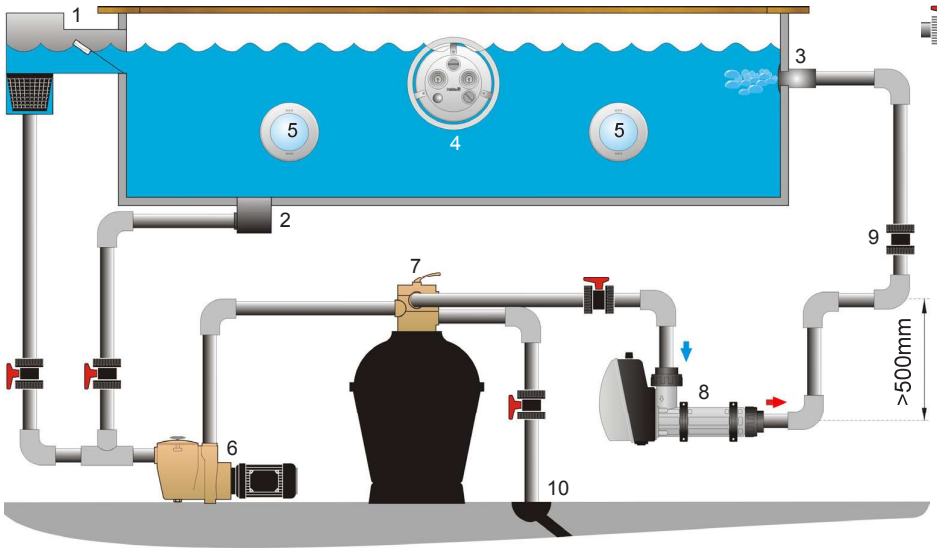

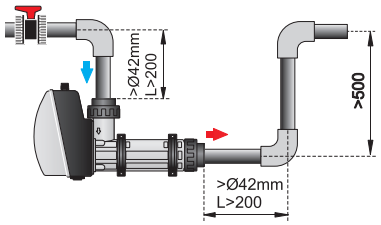

1. Skimmer
2. Main drain
3. Inlet
4. JetSwim
5. Light
6. Pump
7. Filter
8. Electric heater
9. Check valve
10. Drain

Electrical Installation

The electrical installation work must only be performed by a qualified electrician.
The plumbing installation must be complete before the electrical installation work is done.
If no external motor protector is present, connection blocks P1 and P2 must be connected together (strapped).
If the circulation pump is fitted with a protective motor auxiliary relay, this must be connected to connection blocks P1 and P2; refer to the schematic diagram for the respective voltage and number of phases. When the motor protector is engaged, the circuit shall be closed with a floating-voltage change-over contact.
Make sure that the connecting wire cannot come into contact with the hot parts of the element.

3-phase 400/415V AC

Circuit diagram

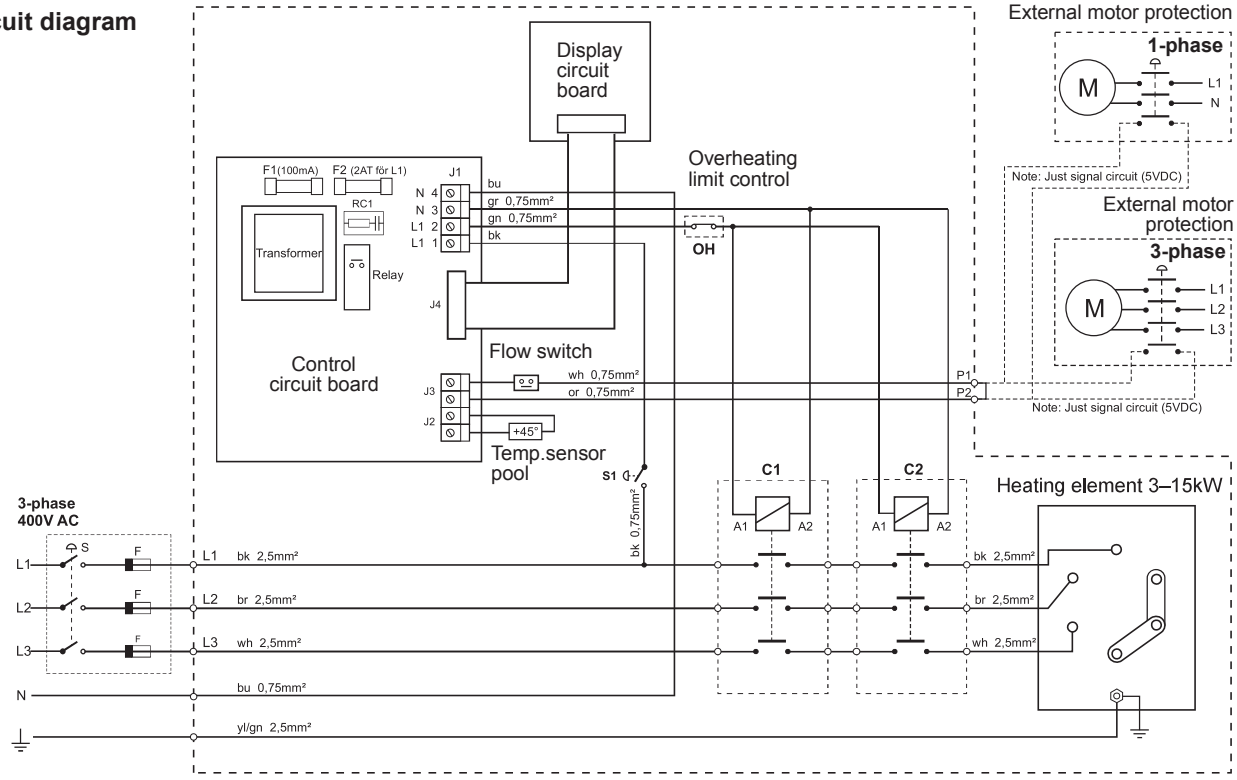

Electric heater Aqua HL line

1-phase 230V AC

Circuit diagram

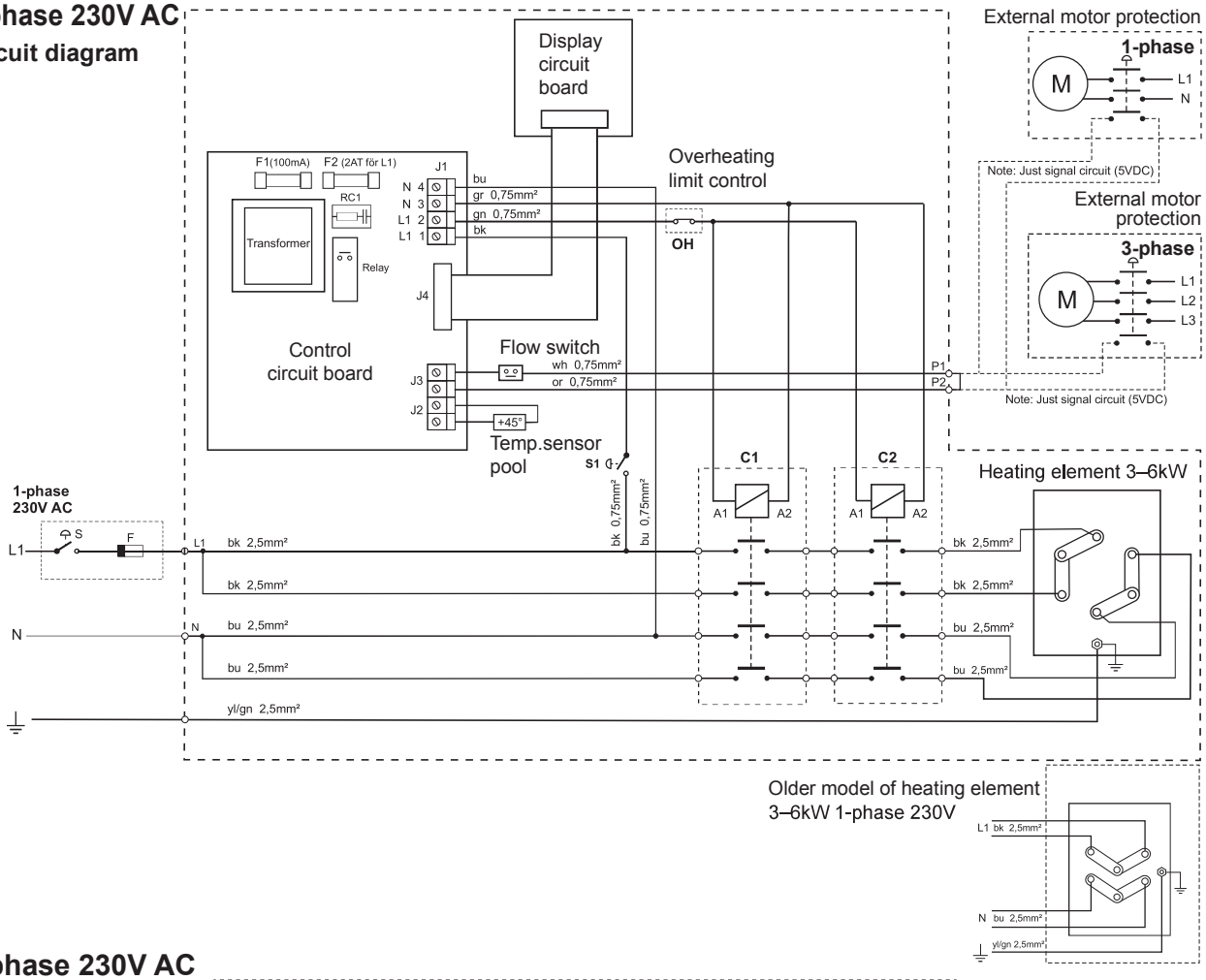

Older model of heating element 3–6kW 1-phase 230V

3-phase 230V AC

Circuit diagram

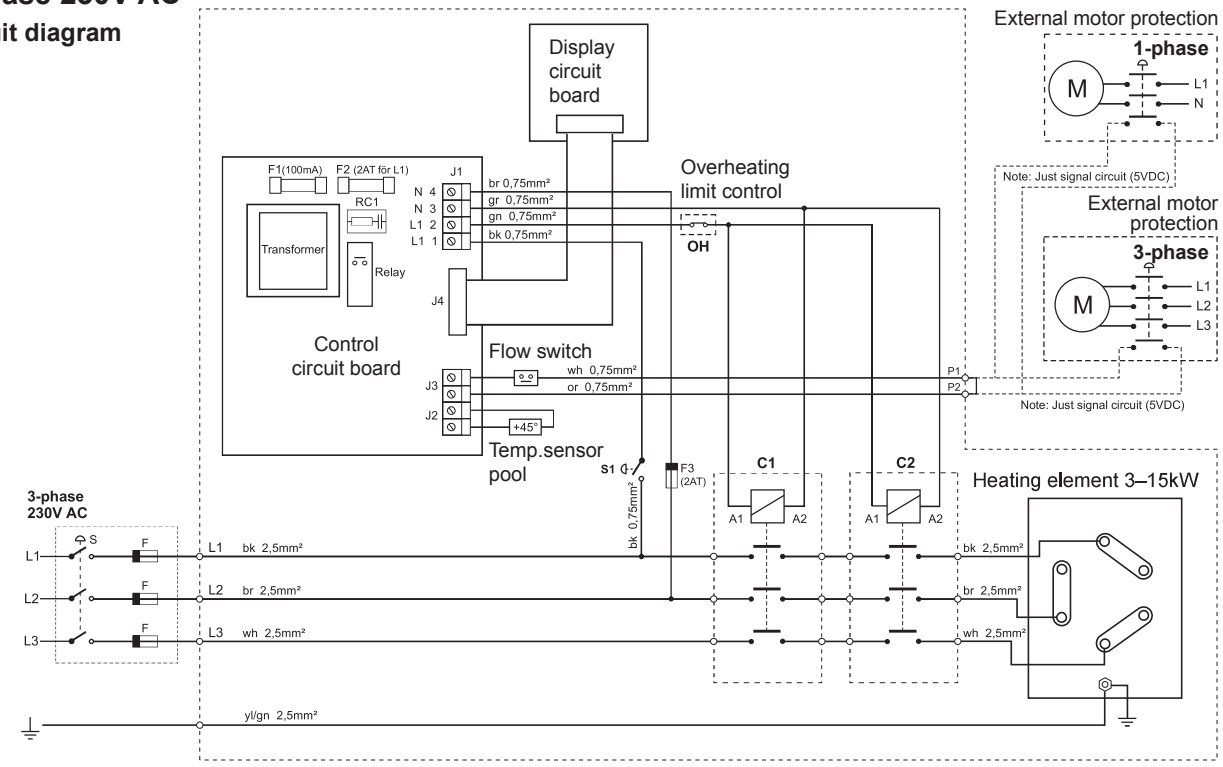

Starting

1. Start the pool water circulation pump.
   Check that the water is circulating normally in the installation before switching on the heater. The heater must be completely full of water before the power is switched on.
2. Switch on the power to the heater.
3. Set the desired pool temperature.
4. Check the flow switch by turning off the flow of water through the heater with a shut-off valve. The contactor should trip.
5. Turn on the water. The contactor should now close (after 15 sec.).
6. The heater will now heat the pool water to the desired temperature.

Setting the temperature



Press once (on the blue or red arrow key) - the display starts to flash and the set temperature is displayed.
Change the temperature up and down with the arrow keys until the required temperature is set.
Red = warmer, blue = colder in steps of 0,5°C.
After the setting is completed, the display will return to showing the actual pool temperature with a fixed light.

Operation

For the heater to work, the pool water must be circulating.
The yellow LED marked “Heating” is lit when the heater is working and goes out when the correct temperature has been reached.
The display constantly shows the current temperature of the water. The set temperature can be changed at any time (see Setting the temperature). To see the set temperature, press once
(the display flashes). NOTE: The set temperature is retained in the memory after a power failure.
NOTE: Always switch off the power to the heater before backwashing and before cleaning the filter.

Trouble shooting

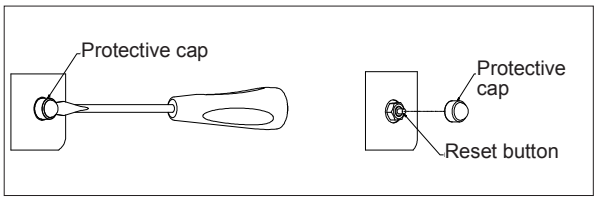

If the heater does not start:
1. Check the fuses
2. The overheating protection may have tripped:
   -Losen the protective cap, see fig beside.
   -Press the reset button on the connection box.
   -Put the cap back.
3. Check the flow rate. The flow switch in the heater is designed for a minimum flow of 90 litres/min.
4. Set the thermostat to a higher temperature.

Error codes

E1 = flow switch, circulation pump
E2 = pool sensor
E7 = control circuit contactor, overheating limit control
Hi = pool temperature above +45ºC +45ºC