PENTAIR

INTELLICHLOR® POWER CENTER

FOR USE WITH INTELLILCHLOR CHLORINE GENERATOR MODEL IC20, IC40 & IC60



INSTALLATION AND USER'S GUIDE

IMPORTANT SAFETY INSTRUCTIONS
READ AND FOLLOW ALL INSTRUCTIONS
SAVE THESE INSTRUCTIONS

Technical Support

Sanford, North Carolina (8 A.M. to 4:30 P.M. ET)

Moorpark, California (8 A.M. to 4:30 P.M. PT)

Phone: (800) 831-7133

Fax (800) 284-4151

Web sites: visit www.pentairpool.com and staritepool.com

Contents

IMPORTANT SAFETY PRECAUTIONS i
IntelliChlor Power Center Overview 1
IntelliChlor System Components 2
Operating Instructions 2
Installation 2
Kit Contents 2
Required Tools 2
Installing the Power Center 3
SAFETY PRECAUTIONS 3
Troubleshooting 6
Electrical Specifications 6
230 VAC Basic System Wiring 6
110 VAC Basic System Wiring 6
IntellliChlor Power Center with ORP Controller 9
Connecting AP Power Wires to ORP Controller 9

c UL us LISTED SWIMMING POOL AND SPA CHLORINATOR 30ZR

CE

NSF Certified to NSF/ANSI 50

P/N 520590 REV. F 1/2015

IMPORTANT WARNINGS AND SAFETY INSTRUCTIONS

⚠DANGER **SERIOUS BODILY INJURY OR DEATH CAN RESULT IF THIS PRODUCT IS NOT INSTALLED AND USED CORRECTLY.**

⚠DANGER **INSTALLERS AND POOL OPERATORS MUST READ THESE WARNINGS AND ALL INSTRUCTIONS BEFORE USING THIS PUMP AND SAND FILTER. To reduce the risk of injury, service should only be done by a qualified pool service professional.**

⚠WARNING Most states and local codes regulate the construction, installation, and operation of public pools and spas, and the construction of residential pools and spas. It is important to comply with these codes, many of which directly regulate the installation and use of this product. Consult your local building and health codes for more information. **Before attempting installation of service, ensure that all power to the circuit supplying power to the IntelliChlor Salt Chlorine Power Center(s) is disconnected/switched off at the circuit breaker.**

⚠WARNING **IMPORTANT SAFETY INSTRUCTIONS PERTAINING TO A RISK OF FIRE, ELECTRIC SHOCK, OR INJURY TO PERSONS. READ AND FOLLOW ALL INSTRUCTIONS.**



IMPORTANT NOTICE - Attention Installer: This Installation and User's Guide ("Guide") contains important information about the installation, operation and safe use of this product. This Guide should be given to the owner and/or operator of this equipment.

⚠WARNING Before installing this product, read and follow all warning notices and instructions in this Guide. Failure to follow warnings and instructions can result in severe injury, death, or property damage.
Call (800) 831-7133 for additional free copies of these instructions. Please refer to www.pentaircommercial.com for more information related to these products.

⚠WARNING **CHLORINE GAS BUILDUP CAN OCCUR WITH IMPROPER WIRING:** To reduce the risk of personal injury the IntelliChlor® Salt Chlorinator Power Center must be installed on and wired to the load side of the time clock, electronically controlled switch, or relay load side, so that it will receive power only when the pool pump is on. Otherwise, dangerous chlorine gas buildup can occur. **The IntelliChlor Salt Chlorinator should never be energized when the pool pump is OFF and water is not flowing through the unit.**

⚠WARNING To reduce the risk of injury, do not permit children to use or operate this pump and sand filter.

⚠WARNING When setting up pool water turnovers or flow rates the operator must consider local codes governing turnover as well as disinfectant feed ratios.

⚠WARNING **DO NOT** increase pump size; this may increase the flow rate through the system and exceed the maximum flow rate stated on the drain cover.

Never operate the IntelliChlor Salt Chlorinator without proper flow or water circulation. A build-up of flammable gases will result in hazardous conditions.

Operate unit with minimum flow of 25 gpm. For high flow applications, use a bypass loop.

IMPORTANT WARNINGS AND SAFETY INSTRUCTIONS

⚠WARNING **Never operate the IntelliChlor® Salt Chlorinator without proper flow or water circulation. A build-up of flammable gases will result in hazardous conditions. Operate unit with minimum flow of 25 gpm. For high flow applications, use a bypass loop.**

⚠WARNING **Only use pipe couplings that meet Schedule 80, maximum pressure 150 psi at 70° F.**

⚠DANGER **RISK OF ELECTRICAL SHOCK OR ELECTROCUTION:**



Always disconnect power to the IntelliChlor Salt Chlorinator at the circuit breaker before servicing. Failure to do so could result in death or serious injury to service person, pool users or others due to electric shock.

⚠WARNING IntelliChlor Salt Chlorinator is for use with permanently-installed pools and may also be used with hot tubs and spas if so marked. **Do not use with storable pools.** A permanently installed pool is constructed in or on the ground or in a building such that it cannot be readily disassembled for storage. A storable pool is constructed so that it is capable of being readily dissembled for storage and reassembled to its original integrity.

⚠WARNING The IntelliChlor Salt Chlorinator Power Centers must be interconnected with the pool pump motor power source. This ensures the IntelliChlor Salt Chlorinator and pool pump will **switch on and off together**.

⚠WARNING When mixing acid with water, ALWAYS ADD ACID TO WATER. NEVER ADD WATER TO ACID.

⚠WARNING Use of chemicals other than those recommended may be hazardous. Follow the Chemical Manufacturer's Instructions.

⚠WARNING To reduce the risk of electric shock, install IntelliChlor Salt Chlorinator a minimum of five (5) feet away from the inside wall of the pool.

⚠WARNING Install the IntelliChlor Salt Chlorinator a minimum of three (3) feet away from the heater outlet. Allow ample access to the IntelliChlor control panel buttons and the IntelliChlor Power Center.

⚠WARNING A solid copper, bonding conductor not smaller than No. 8 AWG (8.4 mm) should be connected to all metal parts of the swimming pool, spa, or hot tub structure and to all electrical equipment, metal conduit, and metal piping.

IMPORTANT WARNINGS AND SAFETY INSTRUCTIONS

For information about the Virginia Graeme Baker Pool and Spa Safety Act, contact the Consumer Product Safety Commission at (301) 504-7908 or visit www.cpsc.gov.

NOTE: Always turn off all power to the pool pump before installing the cover or working on any suction outlet.

⚠WARNING When mixing acid with water, **ALWAYS ADD ACID TO WATER. NEVER ADD WATER TO ACID.**

Do not operate electrolytic cell without proper flow or water circulation. A build-up of flammable gases will result in hazardous conditions.

⚠WARNING When using IntelliChlor® Salt Chlorinator with an IntelliTouch control system, it is recommended to wire the IntelliChlor Power Center to the pump side of the relay located in the IntelliTouch Load Center. This wiring method does not require a ground fault circuit-interrupter (GFCI) to protect the circuit. A green colored terminal (or a wire connector marked “G”, “GR”, “Ground” or “Grounding”) is provided within the terminal compartment in the Power Center transformer enclosure. To reduce risk of electric shock, connect this terminal or connector to the grounding terminal of your electric service or supply panel with a conductor equivalent in size to the circuit conductors supplying this equipment. The power supply must be interconnected with pool pump motor power source. This insures the IntelliChlor chlorinator and pool pump will switch on and off together.

⚠CAUTION Use of chemicals other than those recommended may be hazardous. Follow the Chemical Manufacturer’s Instructions.

⚠CAUTION Install the IntelliChlor unit a minimum of two (2) feet from the heater outlet.

⚠DANGER



Water temperature in excess of 100° F (37.7° C) may be hazardous to your health. Prolonged immersion in hot water may induce hyperthermia. Hyperthermia occurs when the internal temperature of the body reaches a level several degrees above normal body temperature of 98.6° F (37° C.). Effects of hyperthermia include: (1) Unawareness of impending danger. (2) Failure to perceive heat. (3) Failure to recognize the need to leave the spa. (4) Physical inability to exit the spa. (5) Fetal damage in pregnant women. (6) Unconsciousness resulting in danger of drowning. The use of alcohol, drugs, or medication can greatly increase the risk of fatal hyperthermia in hot tubs and spas.

IntelliChlor® Salt Chlorinator Power Center Overview

The IntelliChlor Salt Chlorinator system comprises of a Power Center and electrolytic Cell. The Power Center converts AC electrical current to a low voltage DC current required by the IntelliChlor Salt Chlorinator electrolytic cell to operate and create chlorine for the swimming pool and spa. The Power Center is connected with the pool circulation pump electrical source so that the electrolytic cell only operates when the pool pump is on. It is recommended that a pool pump timer be used to save on energy and prolong the service life of your pool pump and IntelliChlor Salt Chlorinator. A timer is not included as part of the IntelliChlor Salt Chlorinator Power Center kit. The IntelliChlor Salt Chlorinator Power Center can be connected to an IntelliTouch® , EasyTouch® or SunTouch® Control System for automation control.

The Power Center enclosure can be mounted vertically on a flat surface such as a wall or post no more than 15 feet away from the cell controller. The Power Center contains the transformer, fuse, and connector plug to the IntelliChlor Salt Chlorine cell. 110 VAC and 220 VAC wiring is connected at this box, with 35 VDC output to the cell controller. A 10 AMP replaceable fuse is mounted on the electronic circuit board for additional protection. There are no other controls or lights on the outside of the Power Center. A green power LED indicator is mounted on the inside main board. When the Power Center is switched on, the green power LED is lit.

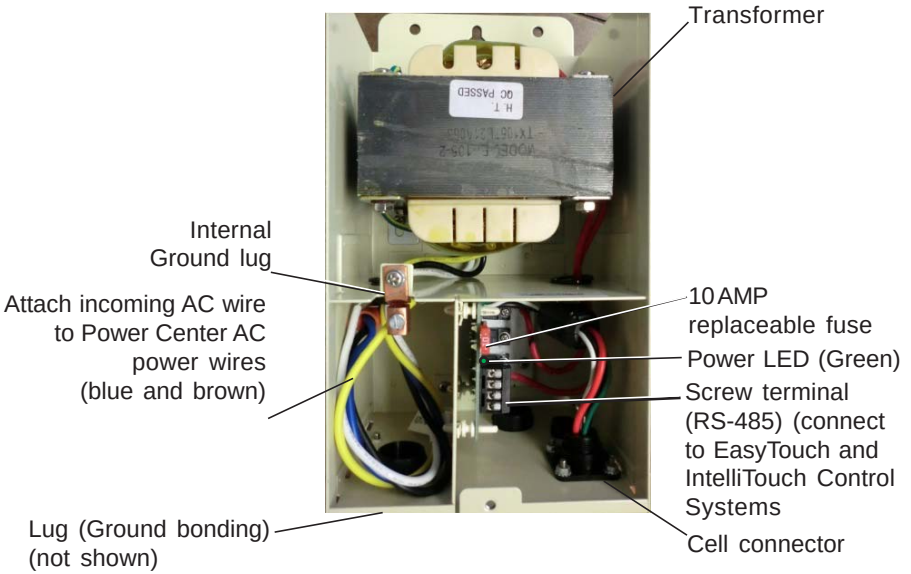

IntelliChlor Salt Chlorinator Power Center
(Model PC 100) (Cover removed)

IntelliChlor® Salt Chlorinator System Components

An IntelliChlor Salt Chlorinator system consists of one or more of the following:

• **PC100 (P/N 520556):** Power Center Kit. Provides power and control communication to and from the IntelliChlor cell.

• **IC20 Cell (P/N 520554):** Designed for pools up to 20,000 U.S. gallons (75,000 liters). The cell will produce the equivalent of 0.70 lbs. of pure chlorine per 24 hours of continuous pool pump run time.

• **IC40 Cell (P/N 520555):** Designed for pools up to 40,000 U.S. gallons (150,000 liters). The cell will produce the equivalent of 1.40 lbs. of pure chlorine per 24 hours of continuous pool pump run time.

• **IC60 Cell (P/N 521105):** Designed for pools up to 60,000 U.S. gallons (227,124 liters). The cell will produce the equivalent of 2 lbs. of pure chlorine per 24 hours of continuous pool pump run time.

• **IntelliChlor "dummy" bypass cell (P/N 520588):** For new pool start-up.

Operating Instructions

When using a pool pump timer: The Association of Pool and Spa Professionals (APSP) recommends that all water in a residential pool pass through the filtration system at least once every 12 hours (referred to as pool water turnover). However, many factors have an effect on actual pump and filter system run times. Pool size, source of water, direct sun light, indoor/outdoor, screened and unscreened, filtration system, cold or hot weather, swimmer load, rain, organic debris, algae, etc., are all factors which contribute to either more or less pool pump and filter system run times. Because of these differences, it is extremely difficult to set an initial run time (starting point) for the pool pump and chlorinating system.

Try initially setting the pool pump timer to 12 hours. It will take a few days to get just the right amount pool pump operating time. When the InteliChlor Salt Chlorator is wired with a pool pump timer (see page 6) results will vary greatly from one pool installation to the next, so this should be discussed with either the pool builder or your pool professional.

Installation

The following information describes how to install the IntelliChlor Salt Chlorinator Power Center. Before installing, review the IntelliChlor Salt Chlorinator kit contents and required tools. For cell installation instructions, see the "IntelliChlor User's Guide" (P/N 520584).

Kit Contents

- One Power Center enclosure
- Installation Guide (this manual)

Required Tools

- Phillips & Flathead screwdrivers
- Voltmeter. (To determine AC line voltage to Power Center)
- Electric drill and 1/4" masonry drill bit. (To mount Power Center)

Installing the IntelliChlor® Salt Chlorinator Power Center

⚠WARNING **IMPORTANT SAFETY PRECAUTIONS. PLEASE READ THE FOLLOWING: Read all the safety precautions in this manual before attempting any electrical wiring. Be sure to read and follow all safety Instructions on page ii. Wiring should only be performed by a qualified professional. When using electrical products, basic precautions should always be followed, including the following:**

⚠DANGER



RISK OF ELECTRIC SHOCK, WHICH CAN RESULT IN SERIOUS PERSONAL INJURY OR DEATH.

Before attempting installation of service, ensure that all power to the circuit supplying power to the system is disconnected/switched off at the circuit breaker. When using IntelliChlor Salt Chlorinator with an IntelliTouch® Control System, it is recommended to wire the IntelliChlor Salt Chlorinator Power Center to the pump side of the relay located in the IntelliTouch Control System Load Center. This wiring method does not require a ground fault circuit-interrupter (GFCI) to protect the circuit. A green colored terminal (or a wire connector marked “G”, “GR”, “Ground” or “Grounding”) is provided within the terminal compartment in the Power Center transformer enclosure. To reduce risk of electric shock, connect this terminal or connector to the grounding terminal of your electric service or supply panel with a conductor equivalent in size to the circuit conductors supplying this equipment. The power supply must be interconnected with pool pump motor power source. This insures the IntelliChlor Salt Chlorinator and pool pump will switch on and off together.

- Grounding (earth bonding) is required. The unit should be installed by a qualified service person and grounded.

⚠CAUTION

- Install the IntelliChlor Salt Chlorinator enclosure a minimum of two (2) feet from the heater outlet.
- Allow ample access to the IntelliChlor Salt Chlorinator control panel buttons and the IntelliChlor Salt Chlorinator Power Center.
- Pipe couplings: Schedule 80, maximum pressure 150 psi at 70° F.
- Operate unit with minimum flow of 20 gpm. For high flow applications, use a bypass loop.

⚠CAUTION

Install the Power Center at eye level as close to the IntelliChlor Salt Chlorinator pump and filtration as possible.
The IntelliChlor Salt Chlorinator power center must be installed more than 8 ft. (2.44 m) from the pool edges. Leave sufficient clearance on all sides of the Power Center. Ensure that the 15 ft. (4.61 m) DC power cord from the Cell assembly pipe location can reach the Power Center location. The Power Center enclosure can be mounted on the wall up to 15 feet away from the cell controller.
Note: For installation instructions about connecting the cell to Power Center, see the “IntelliChlor User’s Guide” (P/N 520589).

Installing the Power Center

Install the Power Center at eye level as close to the IntelliChlor pump and filtration as possible. **CAUTION: The Power Center must be installed more than 8 ft (2.44 m) from the pool edges.**

Leave sufficient clearance on all sides of the Power Center. Ensure that the 15 ft (4.57 m) "Type Z" DC power cord from the Cell assembly pipe location can reach the Power Center location. The Power Center enclosure can be mounted on the wall up to 15 ft (4.57 m) away from the cell controller. ***Note:*** *For installation instructions about connecting the cell to Power Center, see the IntelliChlor User's Guide (P/N 520848).*

Mount the Power Center enclosure:

1. Remove the screw securing the Power Center cover and remove the cover.
2. Mount the Power Center on a flat surface such as a wall or post and mark each mounting bracket screw hole location. There are two (2) screw holes and a keyslot for the top and lower bracket.
3. Drill six ¼ in (6.35 mm) holes. Install anchors if necessary and one screw for each bracket keyslot location.
4. Position each Power Center keyslot (top and lower) slot over the two mounting screws just installed. Tighten the two (2) screws to secure the enclosure.
5. Install and tighten four (4) mounting screws two (2) in the top and two in the lower bracket.

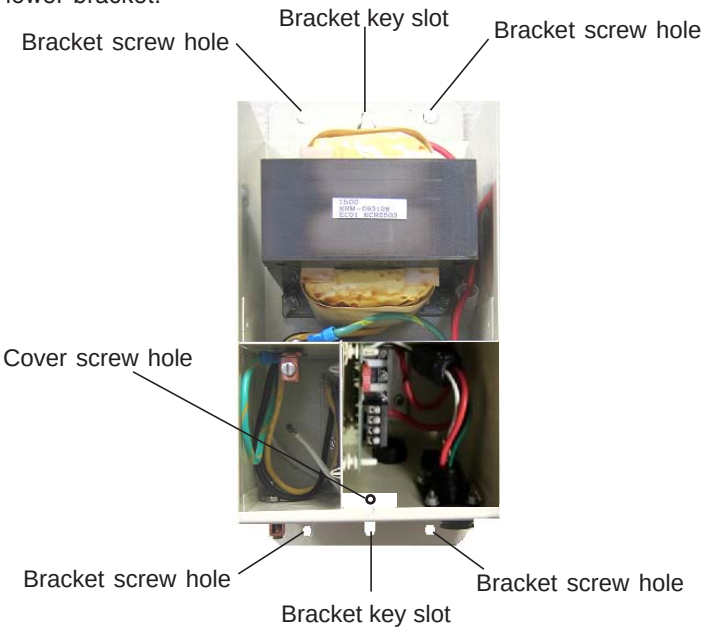

IntelliChlor Power Center (Model PC 100)
(Cover removed)

Connect AC Power to the IntelliChlor® Power Center

Note: *This Power Center is wired as an "All Pole Disconnect" System. Therefore a 3 mm spacing is required for all AC wiring entering the unit.*

6. Use 12-14 AWG three conductor insulated wire for the main AC power connection. Connect the Power Center to pool pump AC power source. The Power Center should be connected to the pump motor switch or automatic timer. For system wiring information, see page 6.
7. Attach incoming GROUND wire to the ground lug inside the Power Center.
8. **Earth Bonding (Grounding)**: Connect the earth wire to the **GROUND BONDING LUG** located on the bottom of the Power Center enclosure. Earth bonding is necessary to ensure personal safety and safety of equipment.

   IMPORTANT: A number 8- guage (8.4 mm)wire is recommended when connecting the power supply to a Permanent Earth Ground connection that is acceptable to the local inspection authority. Attach the bonding point located on bottom of the Power Center to a Common Earth Bonding Point. Do not use the IntelliChlor as the Common Bonding Point. Each piece of non-chlorinator pool equipment requiring a ground should be bonded to the Common Approved Earth Bonding Point. **Never ground pool pump to Power Center.**
9. Reinstall the Power Center cover and secure with the cover screw.
10. The Power Center installation is complete. For IntelliChlor operating information, refer to the *IntelliChlor User's Guide (P/N 520848).*

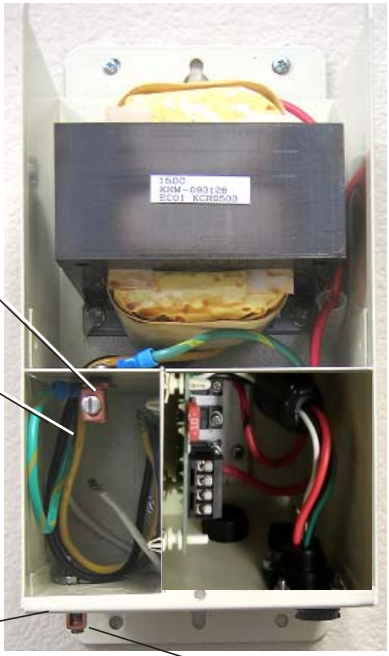

Troubleshooting

Note: *Turn off power to unit before attempting to service or repair.*

Problem	Possible Cause	Corrective Action
The IntelliChlor green power light on the control panel is not on.	Fuse in Power Center is open.	Replace 10 AMP fuse, located on the main circuit board.
	No AC power to Power Center.	Verify time clock is providing 110 VAC or 220 VAC to Power Center when active.
	Tansformer leads not wired correcly in Power Center.	Verify transformer leads wired to AC source by referring to wiring diagram decal on inside of Power Center cover.

Electrical Specifications

Circuit Protection: Two-pole 20 AMP device at the electrical panel.

IntelliChlor Salt Chlorinator Model IC20

Input: 90-130 VAC, 50/60 Hz, 220 Watts (2 AMP) or 220-240 VAC, 50/60 Hz, 220 Watts (1 AMP).

Output: 22-39 VDC @ 7.3 AMPS maximum from the Power Center.

IntelliChlor Salt Chlorinator Model IC40

Input: 90-130 VAC, 50/60 Hz, 220 Watts (2 AMP) or 220-240 VAC, 50/60 Hz, 220 Watts (1 AMP).

Output: 22-39 VDC @ 7.3 AMPS maximum from the Power Center.

IntelliChlor Salt Chlorinator Model IC40

Input: 90-130 VAC, 50/60 Hz, 220 Watts (2 AMP) or 220-240 VAC, 50/60 Hz, 220 Watts (1 AMP).

Output: 22-39 VDC @ 7.3 AMPS maximum from the Power Center.

IMPORTANT: When using IntelliChlor ® Salt Chlorinator with an IntelliTouch ® Control System, EasyTouch® Control System or SunTouch® Control System, it is recommended to wire the Power Center to the PUMP SIDE OF THE RELAY located in the automation control system load center. This method does not require a ground fault circuit-interrupter (GFCI) to protect the circuit.

110 VAC and 220 VAC Transformer Wiring

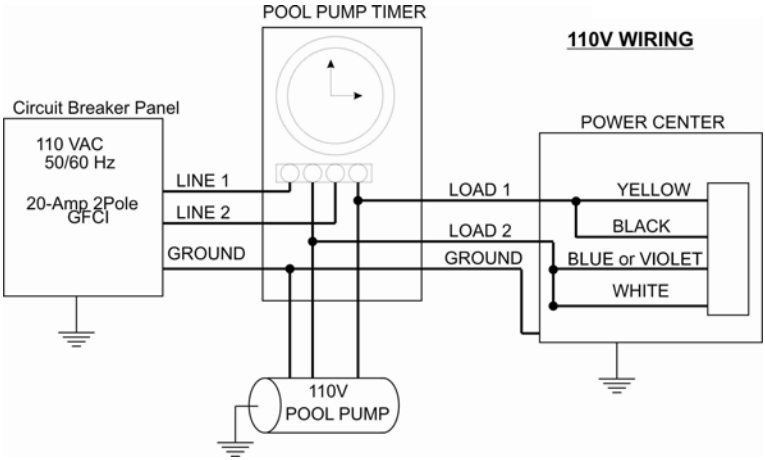

115 VAC Basic System Wiring

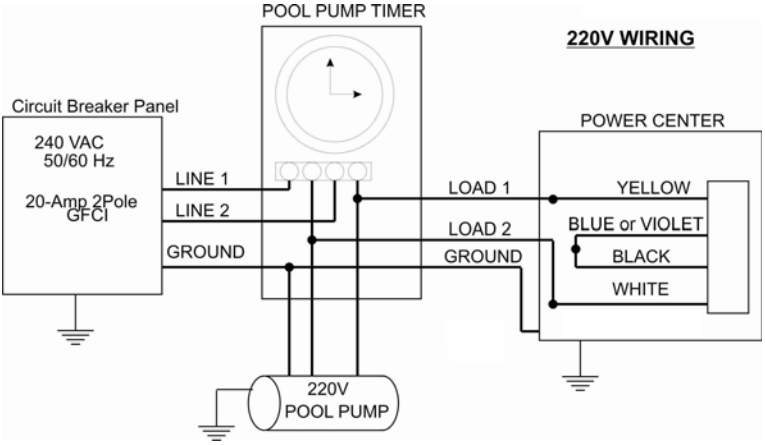

230 VAC Basic System Wiring

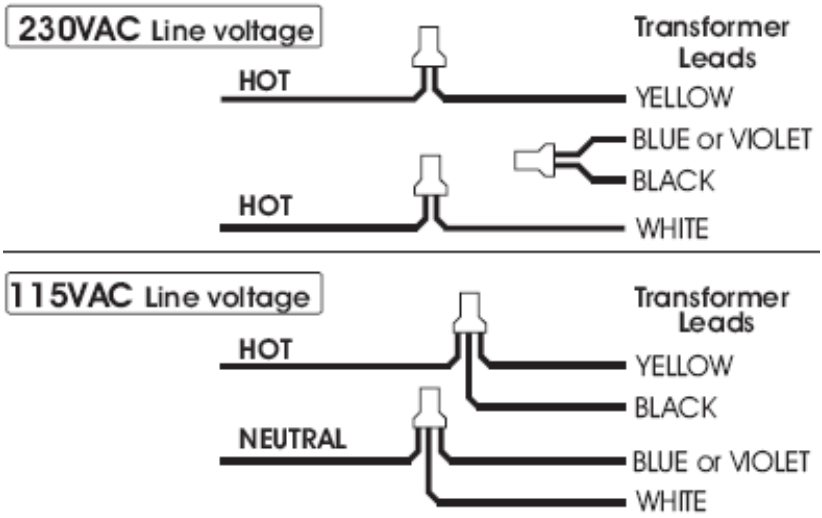

IntelliChlor Salt Chlorinator SPower Center 230 VAC and 115 VAC Transformer Wiring

IntelliChlor Power Center with ORP Controller

Connect AC Power Wires and ORP Controller Wires

1. Provide 208-260VAC power to the POWER CENTER. This power should be on its own breaker for future servicing. A knock-out opening is provided on the bottom of the power center for a conduit.

Note: *For 110VAC operations, each power center will need to be re-configured. A 110VAC wiring diagram is provided on the inside of the power center cover.*

2. Splice the incoming AC power wires onto the two wires labeled **WIRED FOR 220V**. Do not apply AC power yet.

3. Connect the two (2) twisted wires labeled **ORP CONTROLLER** to the ORP chlorine controller (AcuTrol). Carefully place the connection inside of power center.

Note: *The **Acu-Trol Controller** (sold separately), contains an oxidation reduction potential (ORP) sensor that is placed in the water stream to detect the sanitizing ability of the water and according to a user-preset set point, calls for chlorine when low, and cancels chlorine when satisfied. This Controller provides a dry-contact output that connects to the Power center with ORP input. When the dry-contact terminals are closed, chlorine is required. When the dry contact terminals are open, no chlorine is required. The **Acu-Trol** Controller is not used for a stand-alone-No ORP system.*

4. Replace the cover. Secure it using the retaining screw.

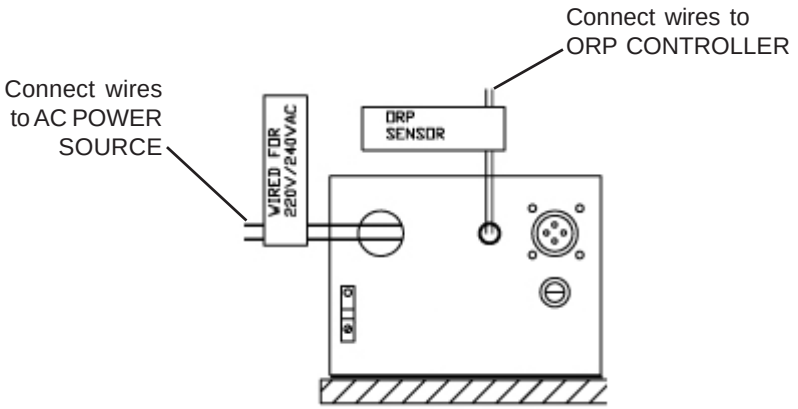

Power Center (Bottom View)

System Diagram

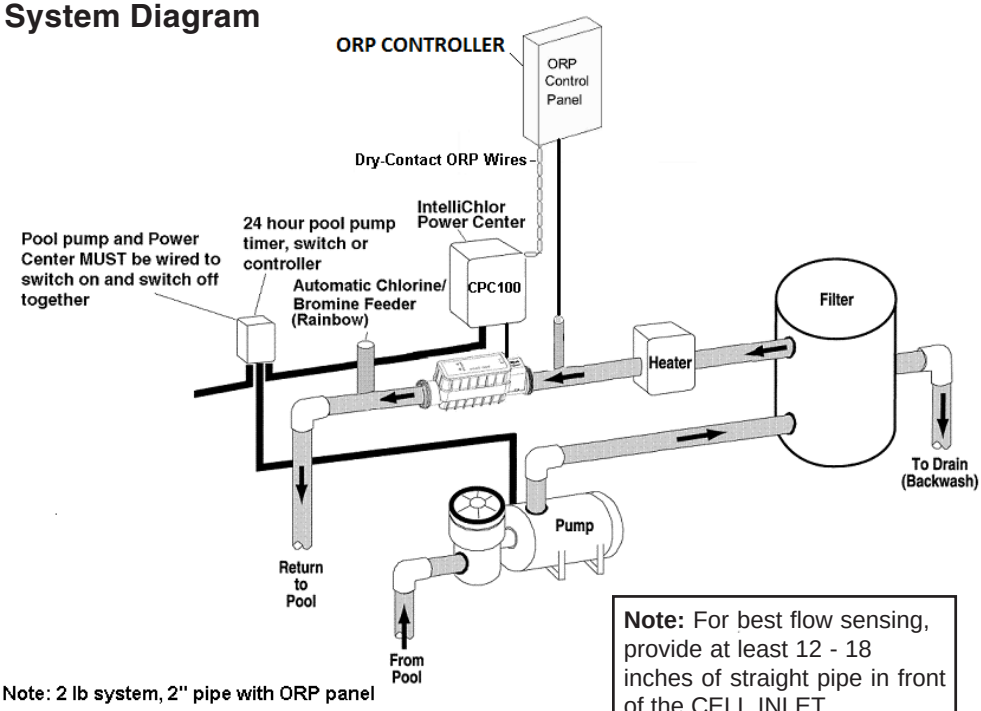

Troubleshooting

Problem:
The IntelliChlor 100% light does NOT come on when the ORP controller calls for chlorine
Actions:
1. Verify the ORP controller is opening and closing the dry-contact output.
2. Remove the ORP CONTROLLER wires connection from the power center and the ORP controller. Manually tie the ORP CONTROLLER wires together. This will turn on the cells at 100%. If the 100% lights do not come on, verify the communication wires are connected.

Problem:
The IntelliChlor 100% light stays on after the chlorine controller says to stop
Actions:
1. Verify the ORP SENSOR wires are not shorted together in the power center.
2. Verify the ORP controller dry contact output is opening and closing by using an ohmmeter. Manually set this output open and closed using the controller menu system.

More and Less Output Buttons on Intellichlor cell.
These buttons control the output setting and only operate in a single-cell system where the cell is connected to the standard 520556 power center, no ORP. **When an ORP system is used, these buttons are disabled.** Chlorine demand is controlled by the ORP controller.



1620 HAWKINS AVE., SANFORD, NC 27330 • (919) 566-8000
10951 WEST LOS ANGELES AVE., MOORPARK, CA 93021 • (805) 553-5000

www. pentairpool.com

All Pentair trademarks and logos are owned by Pentair or one of its global affiliates. Pentair Aquatic Systems™, IntelliChlor®, SunTouch®, IntelliTouch®, EasyTouch®, are trademarks and/or registered trademarks of Pentair Water Pool and Spa, Inc. and/or its affiliated companies in the United States and/ or other countries. Unless expressly noted, names and brands of third parties that may be used in this document are not used to indicate an affiliation or endorsement between the owners of these names and brands and Pentair Water Pool and Spa, Inc. Those names and brands may be the trademarks or registered trademarks of those third parties. Because we are continuously improving our products and services, Pentair reserves the right to change specifications without prior notice. Pentair is an equal opportunity employer.

© 2015 Pentair Water Pool and Spa, Inc. All rights reserved.
This document is subject to change without notice



P/N 520590 REV. F 1/2015