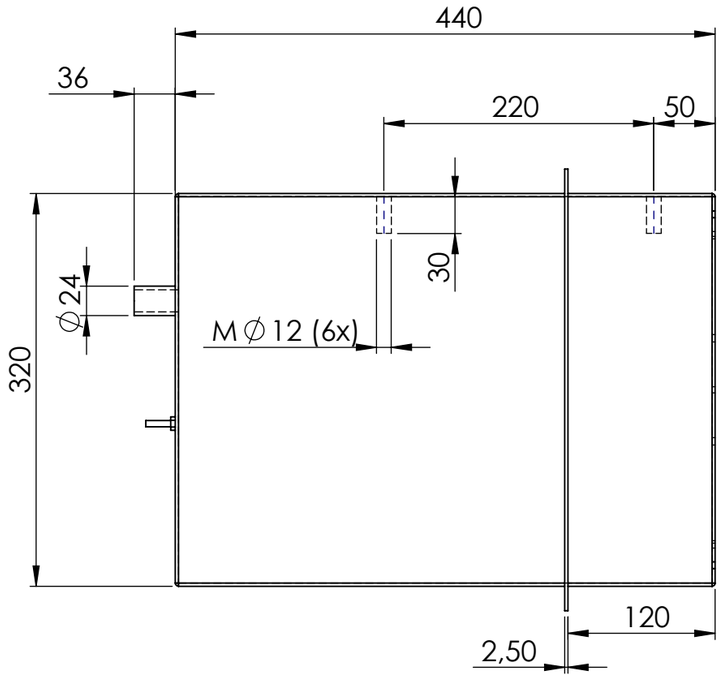

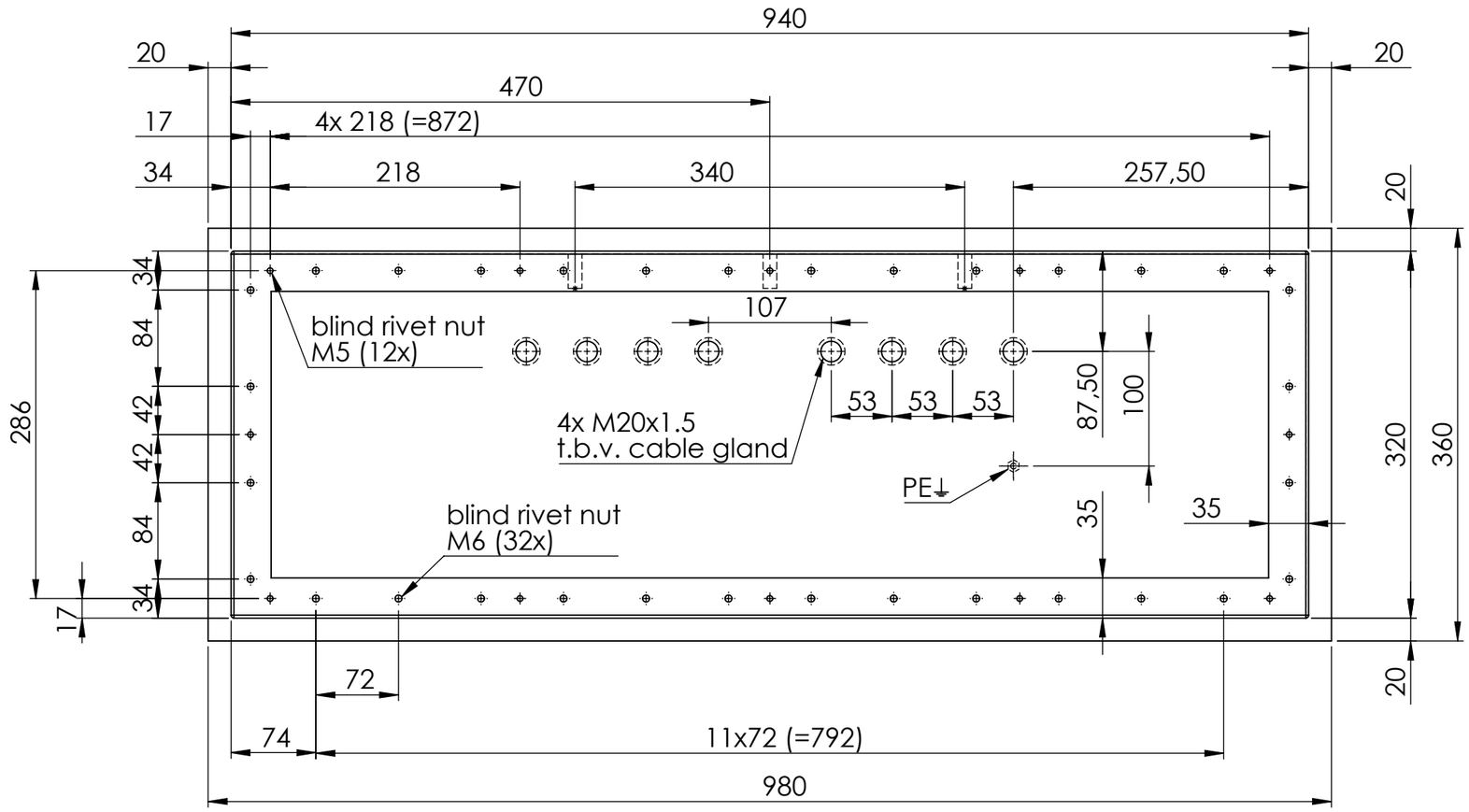

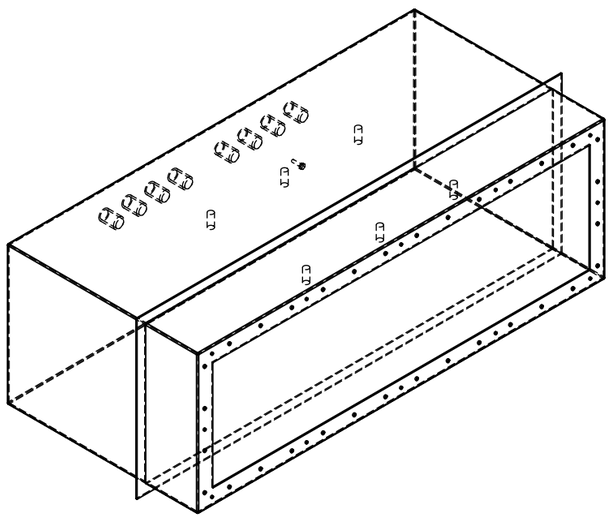

Contact : EVA Optic B.V. De Velde 1 8064PH Zwartsluis The Netherlands	Proj:	Scale: 1:10	EVA
Materiaal : RVS 316	Drawn by: J.Vos	created: donderdag 5 maart 2020 15:15:55 modified: donderdag 17 september 2020 11:47:07	
DWG NO : EVAstream	TITLE: EVAstream wide niche RVS -	Size: A3	
		copyrights EVA Optic	SHEET 1 OF 1