DOLPHIN S300i

Item #	Item Number	Description
001	**Kit Options**	
. 001.01	**99956033-ASSY**	PS ADVANCED 230V
. 001.01.01	9983204	CORK FOR DC IN PWS S300i
. 001.02	**9996087-ASSY**	CADDY NS
. 001.02.01	9991098	TOP HANDLE
. 001.02.02	9980675	HANDLE HOOK
. 001.02.03	9980676	PROFILE INSERT
. 001.02.04	9983202	CADDY ADAPTOR FOR P.S S300i
. 001.02.05	4197023-ASSY	PROFILE AL. CADDY + INSERT ASSY
. 001.02.06	9983203	COVER FOR P.S HOUSING
. 001.02.07	9983181	CADDY ADAPTOR S LINE
. 001.02.08	9980672	WHEEL COVER NEW CADDY
. 001.02.09	9980670	BASE CADDY
. 001.02.10	9980681	WHEEL FOR CADDY OM
. 001.02.KIT	9991503-ASSY	NEW CADDY SCREW KIT
. 001.03	5898411LF	CABLE SWITCHING POWER SUPPLY EU
01	99952112-ASSY	FILTER COVER S300i WHITE ASSY
02	99831362	FILTER COVER LATCH BLUE
03	**Kit Options**	
. 03.01	9983106	ROUGH FILTER S
. 03.02	9991458-ASSY	CARTRIDGE FILTER ASSY M2/M2i
. 03.02A	9991457-ASSY	SPRING FILTER ASSY M2
. 03.03	9983108	FILTER HANDLE M2/M2i
. 03.04	9983109	FILTER HANDLE LATCH M2/M2i
. 03.05	3917029	FILTER HANDLE SPRING M2/M2i
. 03.06	6350150	NON RETURN VALVE M2/M2i
. 03.07	9983110	UPPER FILTER FRAME M2/M2i
. 03.08	9983162	FILTER PILLAR 2
. 03.09	9983164	FILTER PILLAR 4
. 03.10	9983161	FILTER PILLAR 1
. 03.11	9983163	FILTER PILLAR 3
. 03.12	9991467-ASSY	CARTRIDGE FILTER PANELS KIT M2
. 03.13	9983105	LOWER FILTER FRAME M2/M2i
. 03.14	9983107	FILTER DOOR
. 03.15	9991463-ASSY	SPRING FILTERS KIT M2/M2i
. 03.A	3379450-A	SCREW KA40X12 WN1412 A2
04	5000009	AMPHENOL PLUG
05	9983175	TOP LID S300i
06	99952102-ASSY	OUTER CASING S300i
07	99831731	LEFT GRILL S300i BLUE
08	99831741	RIGHT GRILL S300i BLUE
09	9991733	FLOAT+HOUSING FOR S300i
10	9991730	WATER TUBE M2/M2i ASSY
11	9983112	WHEEL BEARING M2/M2i
12	9983120	WHEEL BEARING ADAPTOR M2/M2i
13	6101911	WHEEL TUBE FOR D.BASIC

DOLPHIN S300i

Item #	Item Number	Description
15	6101311	PVC BRUSH - BLUE S300i
16	9983102	RAPID DRAIN FLAP
17	**9991271**	RETROFIT FOR CABLE CON. 2015
. 17.01	9985048	CABLE CONN.THREE PIN
. 17.02	1811404	CABLE CONNECTOR
. 17.03	9985027	PLASTIC WASHER 7MM X 2MM
. 17.04	3861002	RK RING FOR CABLE CONN.
. 17.05	9980025	GLANDE WASHER 13MM
. 17.06	9980797	NUT FOR MBU TERMINAL 2015
18	9995885-DIY	CABLE DYN M2 18M DIY
19	9983172	LED LENS M2i
20	99955381-ASSY	WHEEL ASSY S300i PVC BLUE
21	3726284	REAR WEIGHT FOR S
22	3917022	SPRING FOR FILTER S LINE
23	**Kit Options**	
. 23.01	9991735	WATER ADJUSTER TUBE M2/M2i ASSY
. 23.02	9983146	IMPELLER TUBE
. 23.03	9983356	PIN SERVO M2 M800
. 23.04	9983149	SPACER FOR SERVO PIN
. 23.05	5588902	IMPELLER MOTOR HOLDER 2
. 23.06	9995266	BLACK IMPELLER+SCREW DC
. 23.07	9991734-ASSY	COVER FOR MU S300+SERVO+PCB ASSY
. 23.08	3861644	O-RING 164x4 N70
. 23.09	9983151	PCB HOLDER S300
. 23.10	3862503	SEAL ORING 25X3 I.M
. 23.11	5583323	SEAL ORING 32X3
. 23.12	5890051LF	CABLE MBU 2010
. 23.13	9991211-ASSY	IMPELLER MOTOR S300 ASSY
. 23.14	9983180	FRONT CLIPS FOR MBU S300
. 23.15	4850010	DESSICATING BAG
. 23.16	99951558-ASSY	LED S300i ELECT. CARD ASSY
. 23.17	9983166	CLIPS FOR MBU CABLE
. 23.18	9991210-ASSY	DRIVE MOTOR S300 ASSY
. 23.18A	9983142	GEAR Z12 FOR DRIVE MOTOR
. 23.19	3862474	ORING 47X4mm
. 23.20	9983140	CLIP FOR MBU
. 23.21	9991736	BOX FOR MU S300i+LED ASSY
. 23.A	3379440-A	SCREW KA50X12 A2 WN1412
. 23.B	3101308-A	SCREW M3X8 DIN965A-A2 TUF
. 23.MU1	9995388-ASSY	MU S300i LED ASSY
. 23.MU2	9995388-EX	MU M2i LED EX
24	99831521	TRACK M1/M2 BLUE
25	9991731-ASSY	BYPASS ASSY M2/M2i
26	9983100	CHASSIS M2/M2i
27	9983168	BYPASS COVER M2/M2i L
28	9983169	BYPASS COVER M2/M2i R

DOLPHIN S300i

Item #	Item Number	Description
29	**Kit Options**	
. 29.01	9983111	FRONT WHEEL GREY
. 29.03	9983114	WHEEL BUSHING 2
. 29.04	9983121	WHEEL DISK 2
. 29.05	99831031	SIDE PANEL GREY
. 29.A	3379616-A	SCREW KA50X16 WN1412
30	9991732	VACUUM STRIPS KIT OF 10
31	9995545-ASSY	ACTIVE BRUSH S300i BLUE ASSY
32	9983123	ACTIVE BRUSH GEAR S
33	9983116	ACTIVE BRUSH HOLDER M2/M2i L
34	9983119	ACTIVE BRUSH ADAPTOR S R
35	9983088	WHEEL TUBE FOR ACTIVE BRUSH S300
36	99831221	BLUE BRUSH FOR ACTIVE BRUSH
37	9983113	ACTIVE BRUSH BUSHING S
38	9983118	ACTIVE BRUSH ADAPTOR M2/M2i L
39	9983117	ACTIVE BRUSH HOLDER M2/M2i R
A	3379616-A	SCREW KA50X16 WN1412
B	3379440-A	SCREW KA50X12 A2 WN1412

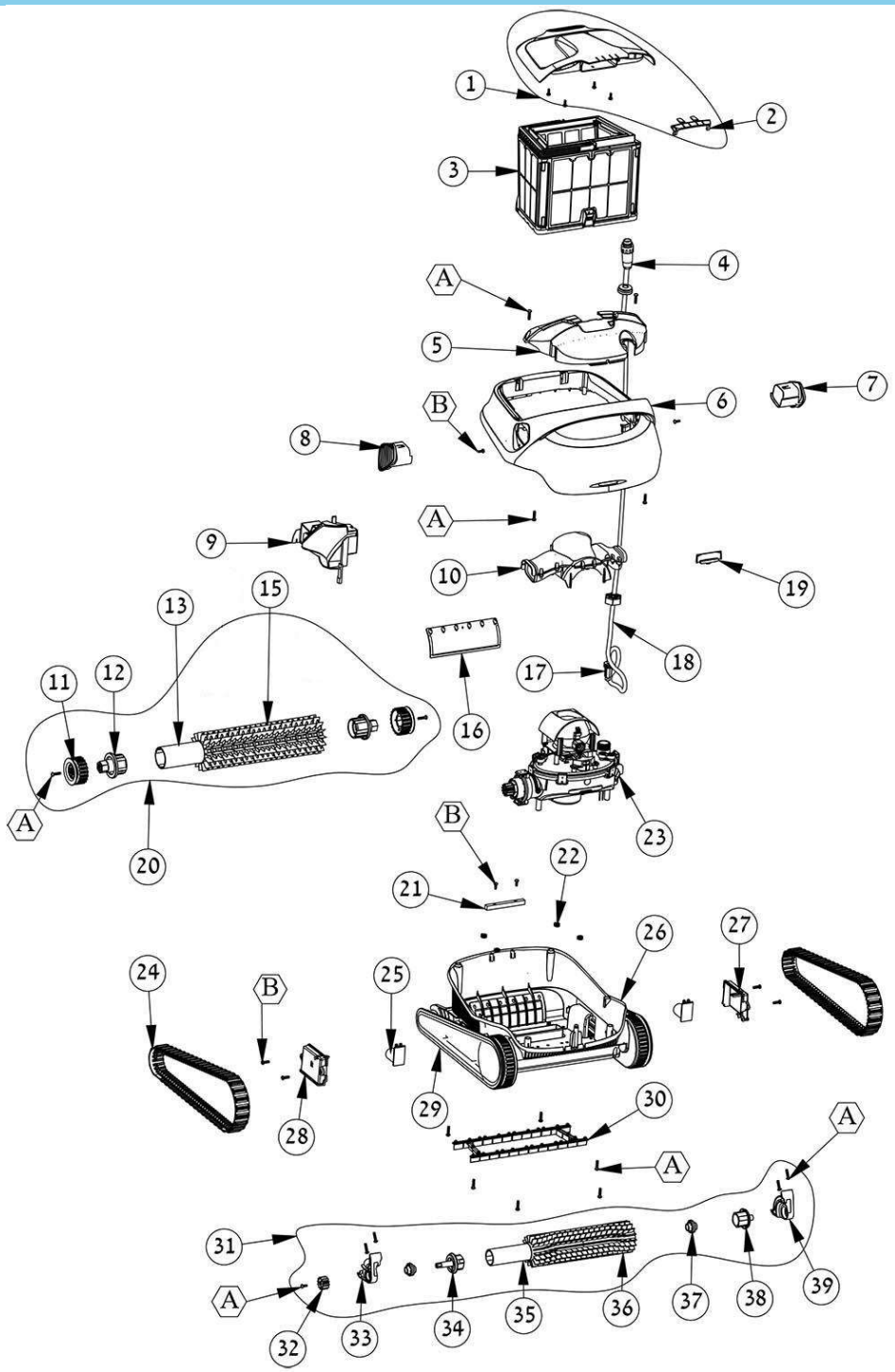
1
2
3
4
A
5
6
7
B
8
9
A
10
19
13
15
11
12
17
18
16
A
20
23
B
21
22
24
B
25
26
27
28
29
30
A
A
31
A
32
33
34
35
36
37
38
39

#01 (ps advanced 230v)

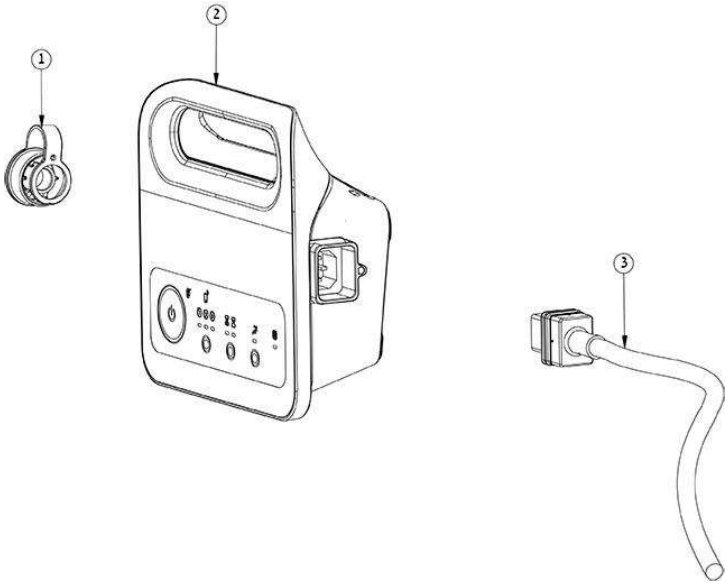

#02 (caddy ns)

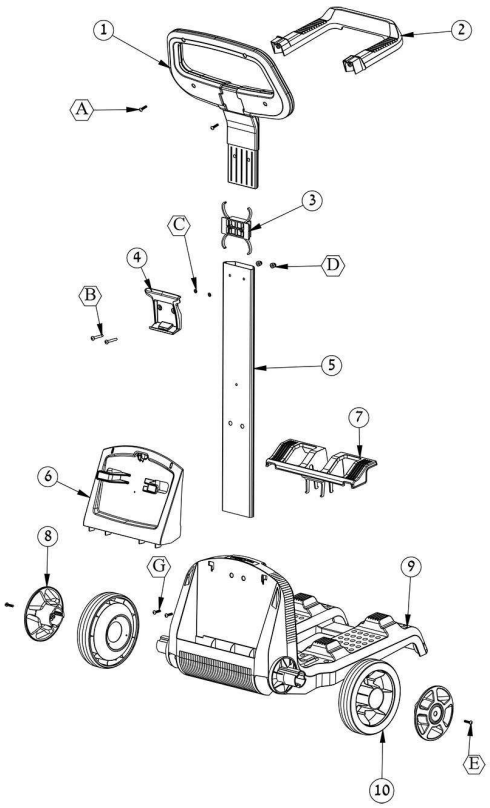

#03 (filters s300i - catalog kit)

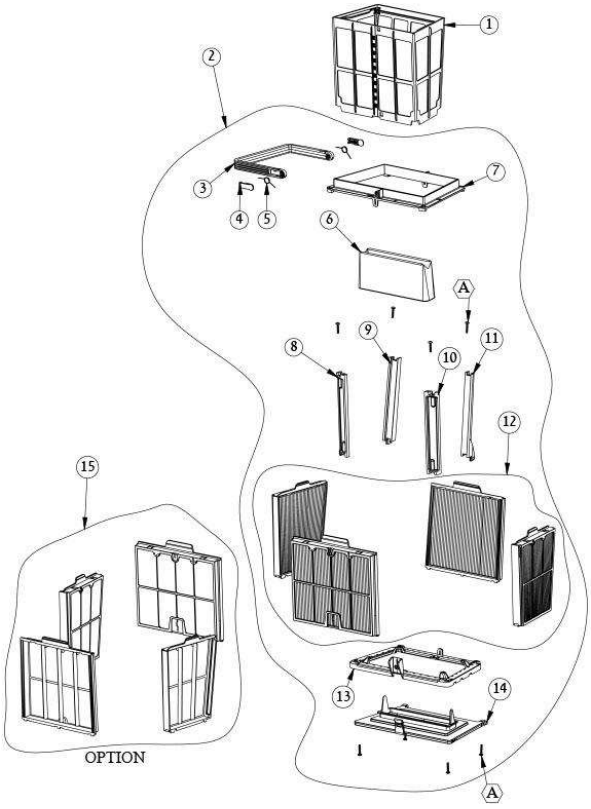

#17 (retrofit for cable con, 2015)

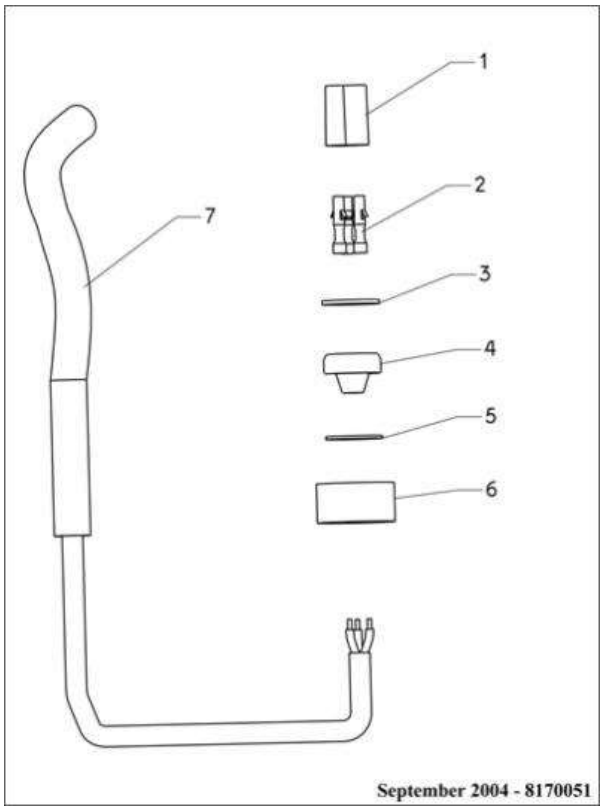

#23 (motor unit catalog kit s300i)

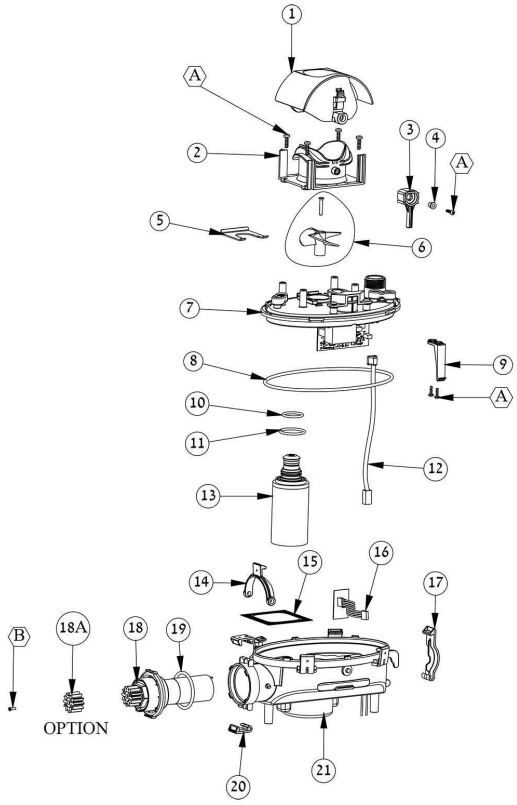

#29 (s300 drive sys cat, kit)

