DOLPHIN SUPREME M5 BIO PVC

Item #	Item Number	Description
01	99957044-ASSY	HANDLE ASSY BIO
02	9991062-ASSY	IMPELLER COVER BIO ASSY
03	9991076	CARTRIDGE DOOR KIT BIO
04	**99952034-ASSY**	OUTER CASING - BIO
. 04.02	9980842	UPPEER SHELL BLACK
. 04.03	9980852	IMPELLER COVER BLACK
. 04.04	3917031	HANDLE CLIP SPRING
. 04.05	9980879	INSIDE HANDLE COVER BLACK
. 04.06	9980876	HANDLE LOCK - SPRING BLACK
. 04.07	9985065	HANDLE ARM SLIDE
. 04.08	9980877	LOCKER HOOK BLACK
. 04.09	9980875	DOOR BUTTON BLACK
. 04.10	9980871	CARTRIDGE DOOR GREEN
. 04.A	3379440-A	SCREW KA50X12 A2 WN1412
. 04.B	3379720-A	SCREW KA50X20 WN1412
. 04.C	3379720-A	SCREW KA50X20 WN1412
05	9995266	BLACK IMPELLER+SCREW DC
06	9991044-ASSY	IMPELLER PROTECTOR ASSY
07	**9991273**	RETROFIT FOR CABLE CON. 2010
. 07.01	9985048	CABLE CONN.THREE PIN
. 07.02	1811404	CABLE CONNECTOR
. 07.03	9985027	PLASTIC WASHER 7MM X 2MM
. 07.04	3861002	RK RING FOR CABLE CONN.
. 07.05	9980025	GLANDE WASHER 13MM
. 07.06	9980728	NUT FOR MBU TERMINAL 2010
08	9982332	CABLE HOLDER DB
09	H6519500	SUCTION PIPE FOR BIO/HYB -10 PCS
10	9993181	UPGRADE KIT FOR BIO SUCTION
11	9991049-ASSY	FLOAT+HOUSE FOR MU SUPREME 5 KIT
12	**Kit Options**	
. 12.01	9995873-DIY	CABLE AND SWV DIY 18M DYN M4/5
. 12.02	9995791-DIY	CABLE SWV DYN 1.2M' DIY
13	**Kit Options**	
. 13.01	9995266	BLACK IMPELLER+SCREW DC
. 13.02	9991044-ASSY	IMPELLER PROTECTOR ASSY
. 13.03	**9991273**	RETROFIT FOR CABLE CON. 2010
. 13.03.01	9985048	CABLE CONN.THREE PIN
. 13.03.02	1811404	CABLE CONNECTOR
. 13.03.03	9985027	PLASTIC WASHER 7MM X 2MM
. 13.03.04	3861002	RK RING FOR CABLE CONN.
. 13.03.05	9980025	GLANDE WASHER 13MM
. 13.03.06	9980728	NUT FOR MBU TERMINAL 2010
. 13.04	5588902	IMPELLER MOTOR HOLDER 2
. 13.05	9982332	CABLE HOLDER DB
. 13.06	9980726	MBU COVER LOCKER LENGTH SIDE
. 13.07	9980727	MBU COVER LOCKER SHORT SIDE

DOLPHIN SUPREME M5 BIO PVC

Item #	Item Number	Description
. 13.08	9991217	MBU COVER DIAG/DYN 2010 ASSY
. 13.09	5890051LF	CABLE MBU 2010
. 13.10	3864202	SEAL 202X4 MBU 2010
. 13.11	3862503	SEAL ORING 25X3 I.M
. 13.12	5583323	SEAL ORING 32X3
. 13.13	9991218	IMPELLER MOTOR 2010 ASSY
. 13.14	99951005-ASSY	ELECTRONIC CARD DYN BIO ASSY
. 13.15	5588900	DRIVE MOTOR HOLDER
. 13.16	4850010	DESSICATING BAG
. 13.17	3862119	SEAL ORING 2-119 D.M
. 13.18	3861902	SEAL ORING 19X2 D.M
. 13.19	9991219	DRIVE MOTOR 2010 ASSY
. 13.20	9980723	MBU BOX DYN 2010
. 13.A	3379440-A	SCREW KA50X12 A2 WN1412
. 13.B	3379440-A	SCREW KA50X12 A2 WN1412
. 13.C	3389208-A	SCREW ZP WN1412 KA30X08
. 13.MU1	9995384-ASSY	MU M5 BIO NEW
. 13.MU2	9995384-EX	MU M5 BIO EX
14	**Kit Options**	
. 14.03	9980731	CARTRIDGE LOCKING HOOK
. 14.04	9980753	FILTER KIT LOCKING ADAPTOR
. 14.05	9991433-ASSY	SPRING FILTER KIT OF 4
. 14.05-1	9991434-ASSY	KIT OF 4 BIO FILTERS
. 14.06	9980733	FILTER AND CARTRIDGE HOLDER
. 14.07	9991432-ASSY	ULTRA FINE CART. FILTER KIT OF 4
. 14.08	9980891	NON RETURN FLAP 2010
15	9980890	FRAME SUPREME M4/5
16	9980858	BRUSH SAFETY COVER BLACK
17	9991048-ASSY	FLOATS FOR SIDE PANELS KIT
18	3865005	D TYPE ADAPTOR
19	3883645	PULLEY FOR FLAT SHAFT - TT
20	3884997	GUIDE WHEEL
21	9985006	TRACK - TIMING TRACK GREY
22	9980859	TRACK SAFETY COVER GREEN
23	9980862	SIDE PANEL BIO
24	9991046-ASSY	DIAPHRAGMA 2010 - PAIR
25	**9995541-ASSY**	ACTIVE BRUSH DYN ASSY
. 25.01	9980737	BEARING HOLDER
. 25.02	9980759	POLIGON SPINDEL
. 25.04	3379440-A	SCREW KA50X12 A2 WN1412
. 25.05	5585177	BEARING 6001 BNL
. 25.06	9980756	BRUSH TUBE CONNECTOR DYN
. 25.07	9980736	ACTIVE BRUSH
. 25.08	9980742	SPUR GEAR 16
. 25.09	6101922	PVC SUPPORT FOR ACTIVE BRUSH
. 25.10	9991594	ACTIVE BRUSH HOLDER ASSY

DOLPHIN SUPREME M5 BIO PVC

Item #	Item Number	Description
26	9991043-ASSY	GEAR FOR ACTIVE BRUSH ASSY
27	**99955956-ASSY**	WHEEL ASSY FOR TIM.TRACK-DYN DB
. 27.01	9982275	CORK FOR INNER WHEEL TUBE D.BASI
. 27.02	3884073-ASSY	DIAG. BASIC -WHEEL BEARING
. 27.03	3885000	DIAG.BASIC STOPPER RING
. 27.04	6101912	PVC TUBE FOR DYN.TT WHEEL ASSY
. 27.05	6101914	DIAG. BASIC - INNER WHEEL TUBE
28	**Kit Options**	
. 28.01	6101633	BRUSH PVC DYN DARK GREY - BIO
. 28.03	6101611	BRUSH WB RING FOR CB
. 28.04	9995560-ASSY	BRUSH WB - DYN - PAIR
. 28.05	99955352-ASSY	WHEEL ASSY DYN BIO + FLOAT
. 28.06	6250962	FLOAT FOR BIO
29	**9996098-ASSY**	CADDY 2011
. 29.01	9991098	TOP HANDLE
. 29.02	9980675	HANDLE HOOK
. 29.03	9980679	RC HOLDER
. 29.04	9980676	PROFILE INSERT
. 29.05	9991503-ASSY	NEW CADDY SCREW KIT
. 29.06	9980678	CABLE HOLDER
. 29.07	4197023-ASSY	PROFILE AL. CADDY + INSERT ASSY
. 29.07-1	4197024-ASSY	PROFILE AL. CADDY LIBERTY+INSERT
. 29.08	9980681	WHEEL FOR CADDY OM
. 29.09	9980672	WHEEL COVER NEW CADDY
. 29.10	9980670	BASE CADDY
30	99954226-ASSY	RCU DYN 2010
31	9980685	CLIPS TO ATTACH PIPE TO CABLE
32	**9995678-ASSY**	POWER SUPPLY DYNAMIC WT
. 32.01	5020012	AMPH. SOCKET COVER FOR P.S
. 32.02	5020011	AMPH. SOCKET FOR P.S
. 32.03	5898411LF	CABLE SWITCHING POWER SUPPLY EU
. 32.A	3379212	SCREW KA30X12 WN1412 A2
33	9991078	SUCTION DOOR KIT FOR BIO
34	9980691	SUCTION INLET COVER
35	9991061	SWIVEL FOR PIPE ASSY
36	9991060	SUCTION SLEEVE ASSY
A	3379720-A	SCREW KA50X20 WN1412

DOLPHIN SUPREME M5 BIO PVC

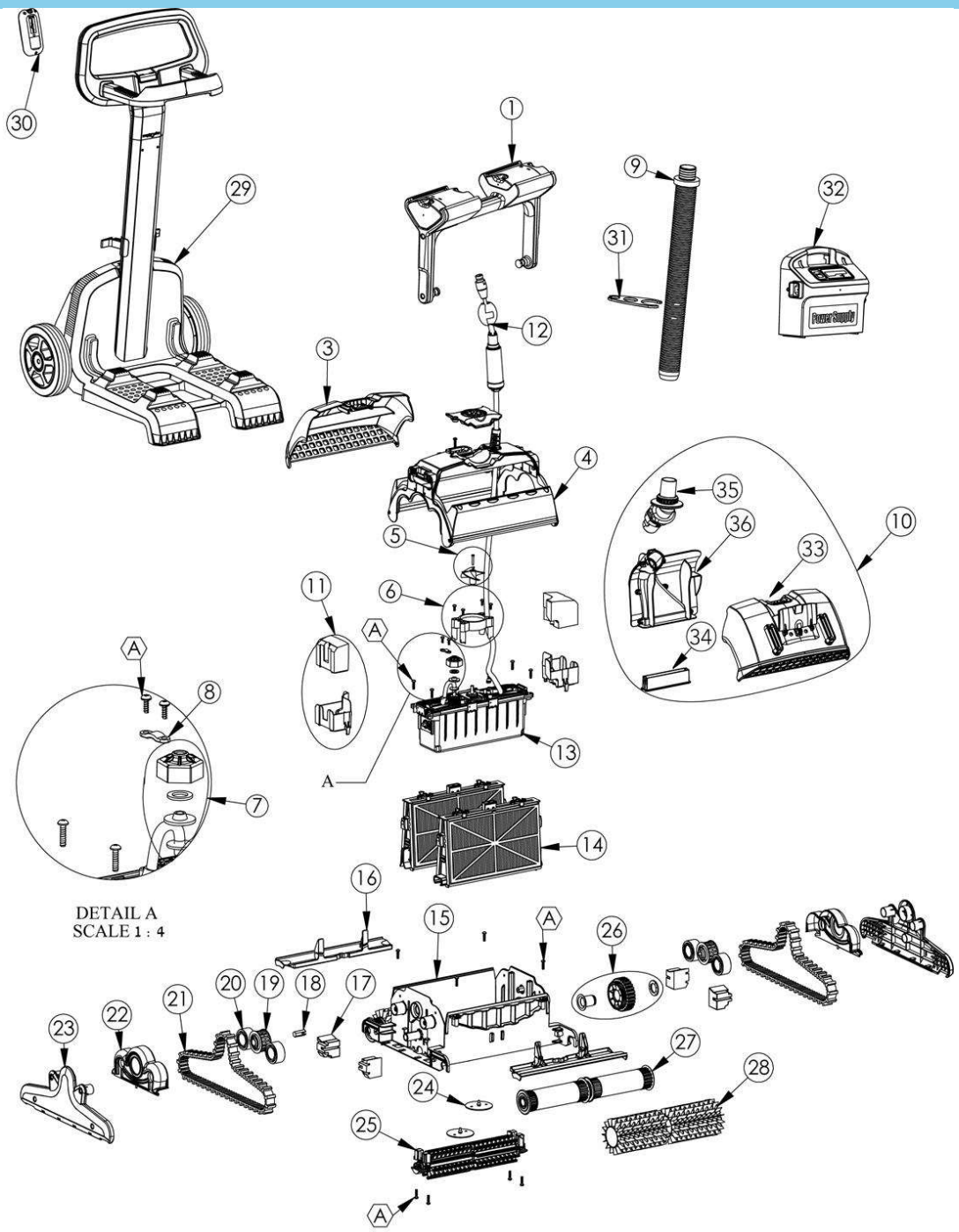

P/N: 8170167 JULY 2011

#03 (retrofit for cable con. 2010)

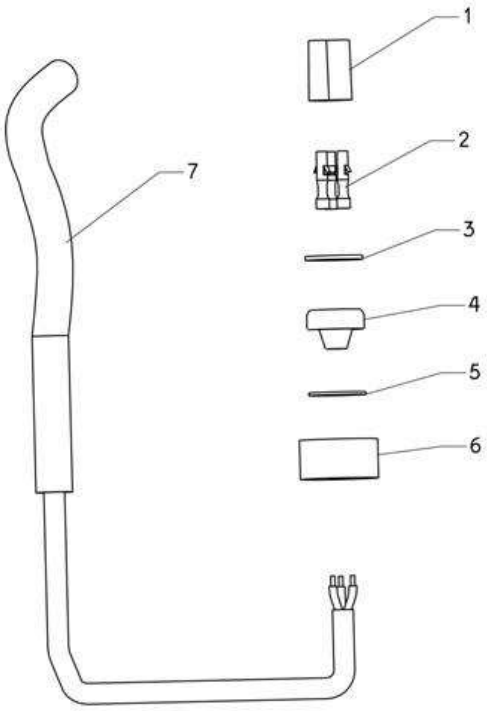

September 2004 - 8170051

#04 (outer casing - bio)

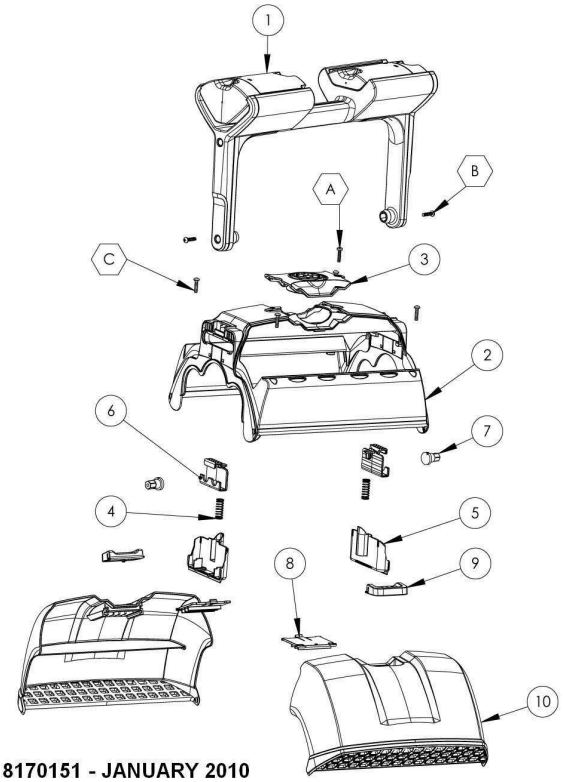

8170151 - JANUARY 2010

#07 (retrofit for cable con. 2010)

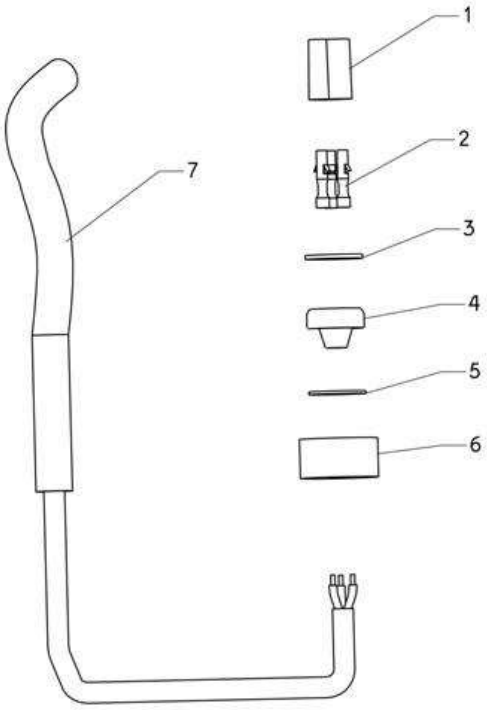

September 2004 - 8170051

#13 (motor unit dyn bio-catalog kit)

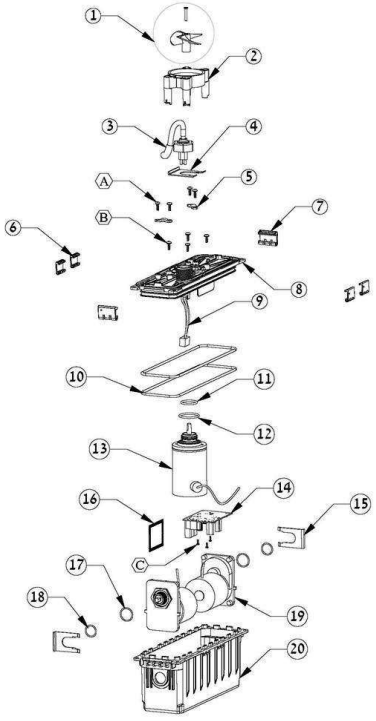

P/N: 8170159 SEPTEMBER 2010

#14 (filters bio - catalog kit)

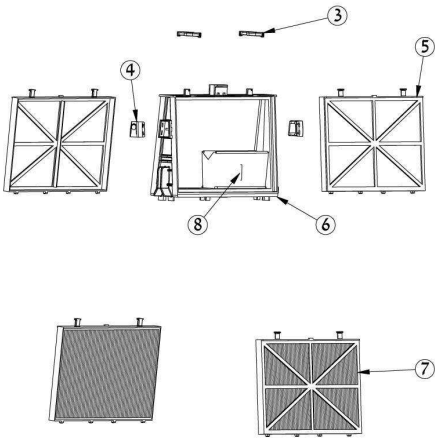

8170148 - JANUARY 2010

#25 (active brush dyn assy)

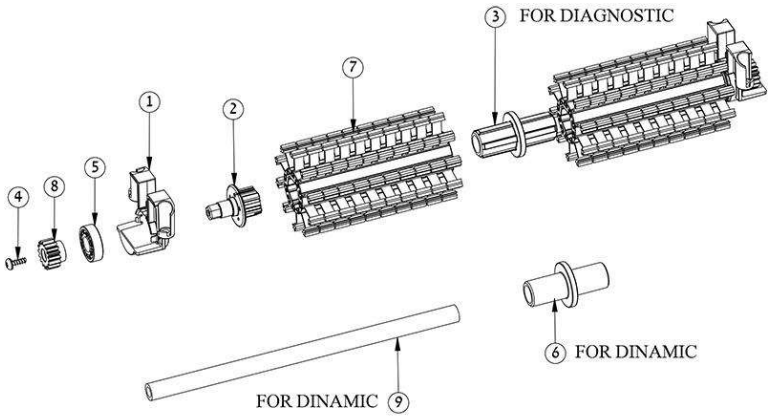

8170147 - JULY 2014

#27 (wheel assy for tim,track-dyn db)

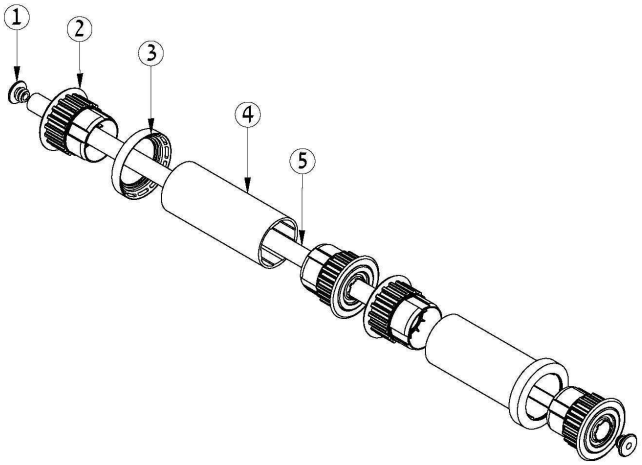

#28 (brushes catalog kit-dyn bio gr)

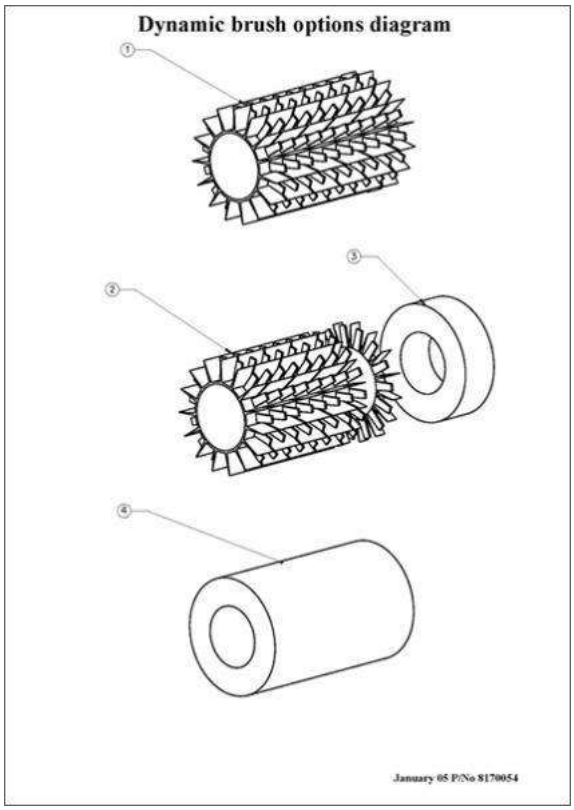

#29 (caddy 2011)

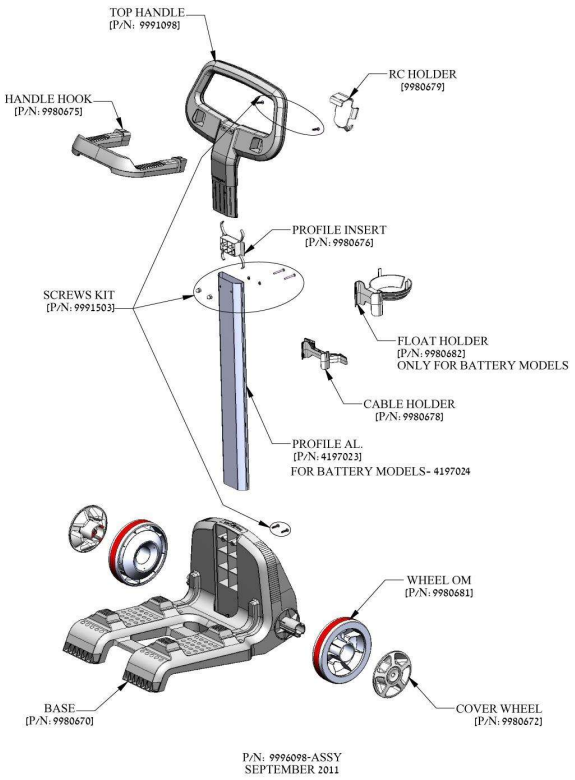

P/N: 9996098-ASSY
SEPTEMBER 2011

#32 (power supply dynamic wt)

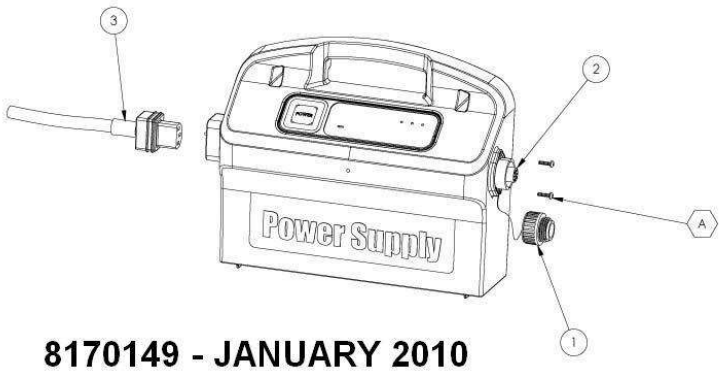

8170149 - JANUARY 2010