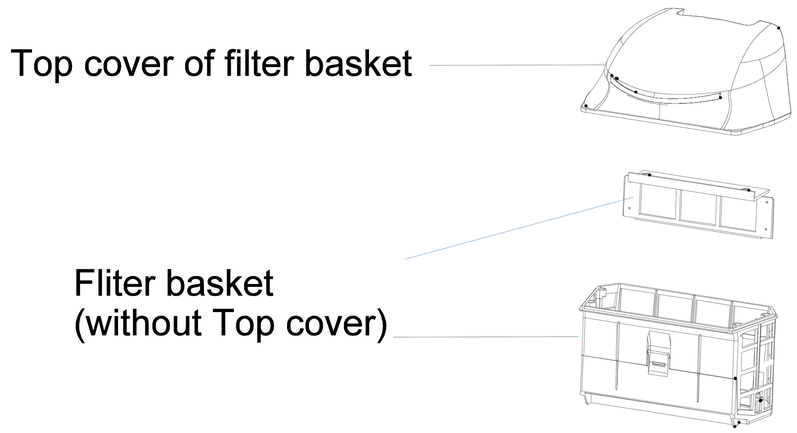
Top cover of filter basket
Fliter basket
(without Top cover)

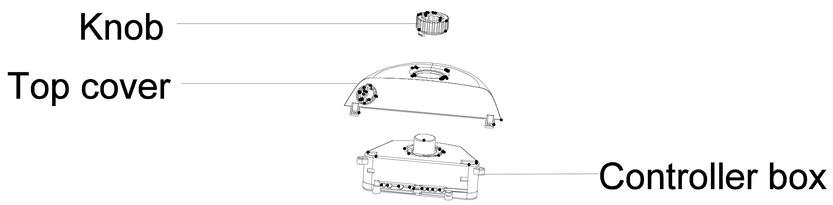
Knob
Top cover
Controller box

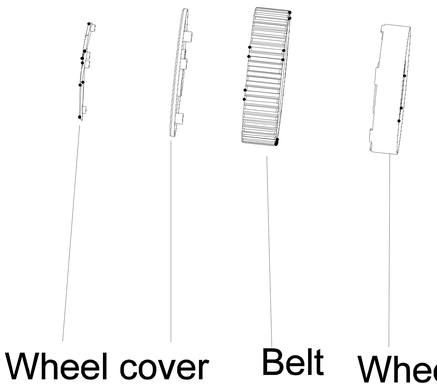
Wheel cover
kit(with screws)
Belt
Wheel

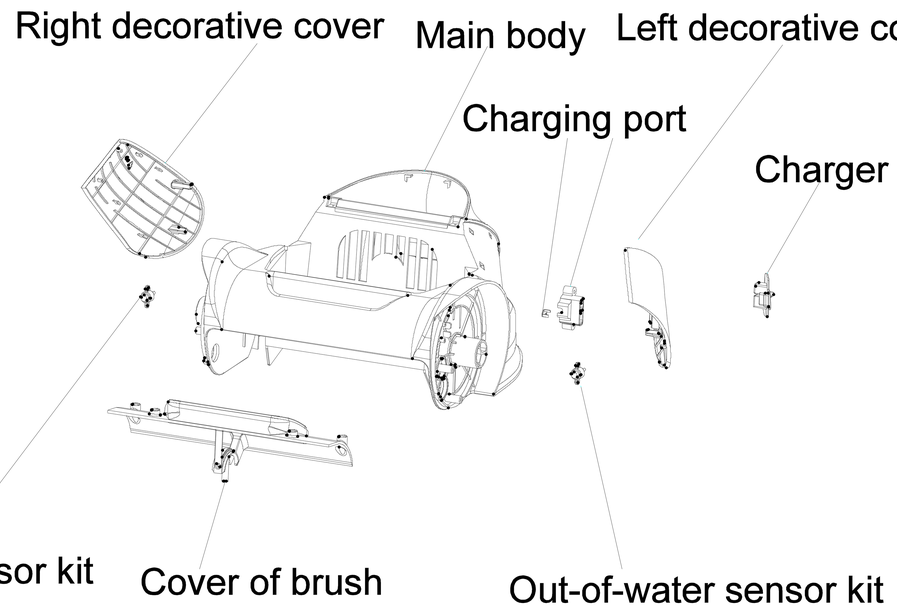
Right decorative cover
Main body
Left decorative cover
Charging port
Charger port cover
Out-of-water sensor kit
Cover of brush
Out-of-water sensor kit

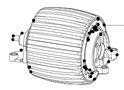
Rear wheel motor

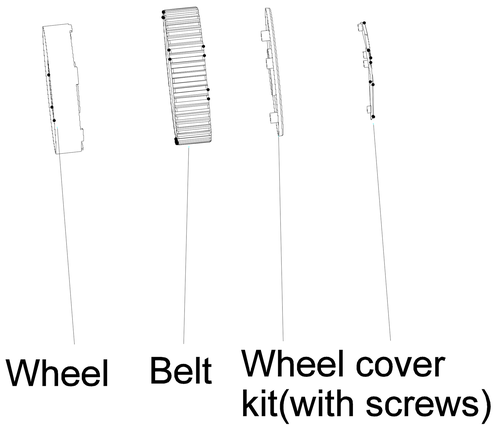
Wheel
Belt
Wheel cover
kit(with screws)

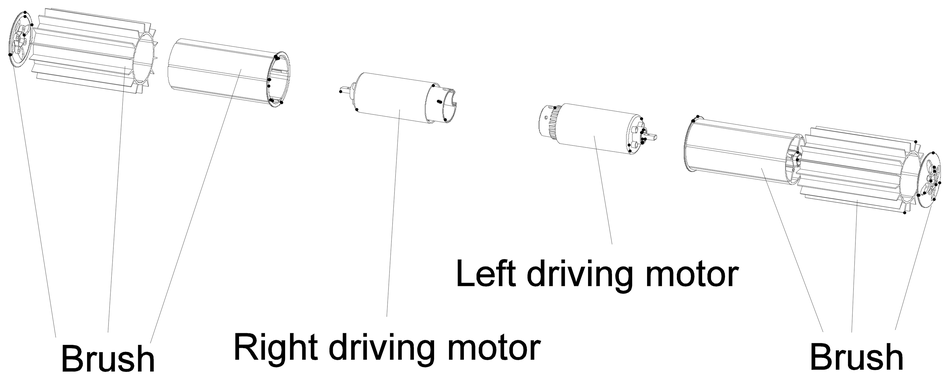
Brush
Right driving motor
Left driving motor
Brush

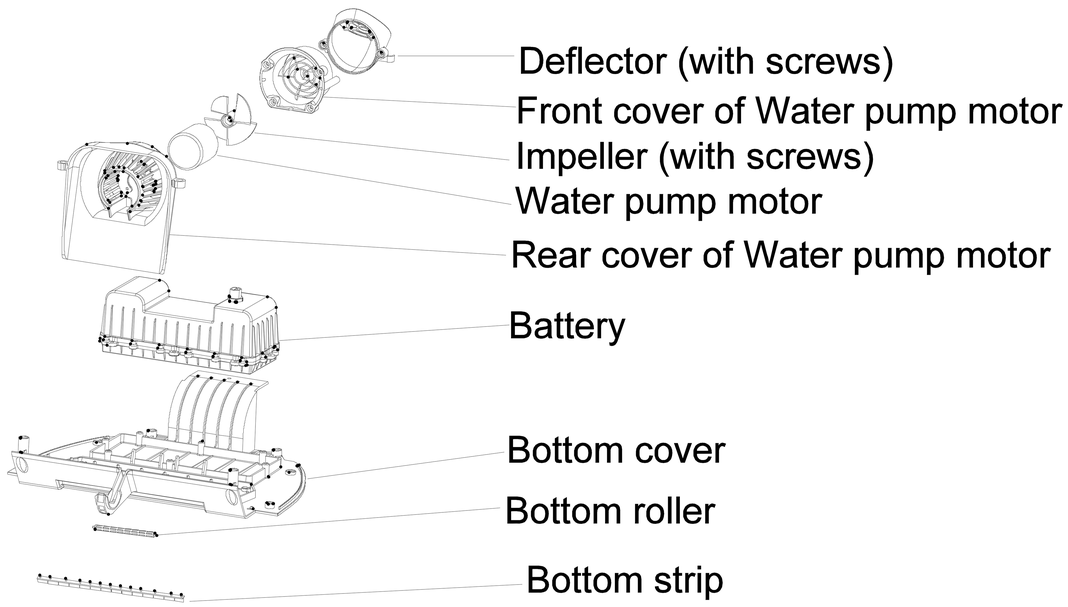
Deflector (with screws)
Front cover of Water pump motor
Impeller (with screws)
Water pump motor
Rear cover of Water pump motor
Battery
Bottom cover
Bottom roller
Bottom strip

InverX Air Spare Part List

NO.	Spare parts name	Picture	Unit	FL Code（2025 Season）
1	Charging Kit （Europe standard)		set	2020010100097
2	Top cover of filter basket（without filter mesh)		Pcs	2020010100326
3	Fliter cover bracket （with screws）--120μm		Pcs	2020010100278
4	Fliter basket (without Top cover)--120μm		Pcs	2020010100279
5	Fairing cover kit（with screws）		Pcs	2020010100280
	Fairing cover kit（with screws）		Pcs	2020010100327
7	Wheel belt（with screws）		Pcs	2020010100283
8	Front wheel belt		Pcs	1223011100005
9	Wheel cover kit (with screws)		Pcs	2020010100356
10	Brush		Pcs	2020010100285
11	Impeller (with screws)		Pcs	2020010100286
12	Bottom cover		Pcs	2020010100287
13	Hook with clip		pcs	2020010100053