Light Drainage Pump Type ABS Robusta 200 and 300

Plug-in submersible pump, for the removal of wastewater containing solids up to 10 mm.



Applications

The Robusta 200 and 300 series has been designed for fixed or transportable installation, and for internal or external applications such as emptying containers and drainage pits, draining of swimming pools or flooded cellars.

Construction

- Single-phase, 50 Hz, 2-pole motor; insulation class B; protection type IP 68. Motor is dynamically balanced with stainless steel shaft. Thermal sensors in the stator switch off the pump in the case of overheating and automatically switch it back on after cooling down.
- The stainless steel rotor shaft is supported in lubricated-for-life ball bearings.
- Connection chamber with cover and watertight cable inlet and strain relief.
- Discharge outlet with internal thread, built-in checkvalve, and detachable multi-stage hose adaptor.
- Shaft sealing is by three lip seals, single at the motor side and double at the medium side, separated and lubricated by a grease chamber.
- The medium being pumped flows around the motor housing for optimum heat dissipation. The maximum allowable medium temperature is 40 °C; or up to 60 °C for intermittent usage (max. 5 minutes).
- Built-in automatic level control, with easily removable float cover for cleaning purposes.
- Integrated switch for manual operation in transportable applications.
- Bayonet clamping allows the screen to be removed by hand in the event an impeller inspection is necessary.

Installation

Attention to the backwash level is of vital importance for effective dewatering. All outflow points located below the backwash level must be protected against back flow according to EN 12056 standard.

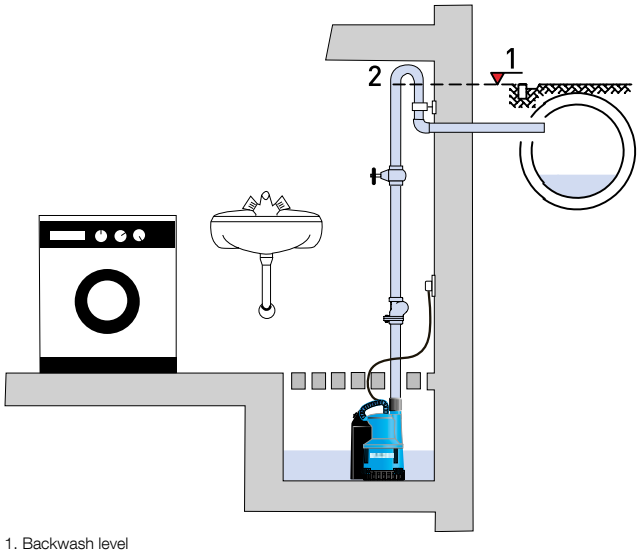

1. Backwash level
2. Baskwash loop with base above the backwash level

Features

- Robusta is fitted with an automatic level control. For transportable applications, the Hand-Auto switch can be set to manual operation.
- The check valve built into the discharge outlet blocks return-flow from the discharge line when the pump is switched off.
- Checkvalve, hose adaptor and 10 m cable with Schuko plug included as standard.
- Suitable for small sumps (from 300 x 300 mm).
- Detachable suction ring. When fitted into the impeller screen allows pumping down to 3 mm (manual operation only).

Materials

Description	Material
Pump Casing	PP
Motor shaft	Stainless steel 1.4057 (AISI 431)
Motor Housing	Stainless steel 1.4301 (AISI 304)
Impeller	PA
Seals	NBR
Cable	Neoprene

Technical data

Robusta WTS	200	300
Discharge connection internal thread	G 1¼"	G 1¼"
Solids size (mm)	10	10
Motor power (kW) *	P_1 = 0.36	P_1 = 0.50
Rated voltage (V)	220-240 1~	220-240 1~
Rated current (A)	1.6	2.2
Cable type (H07RN8-F)	3G1.0	3G1.0
Cable length (m) **	10	10
Weight (kg)	3.8	4.4
Auto-switching levels (mm) On: Off:	145 50	165 75

* P_1 = Power taken from mains.
** For external applications the following VDE regulation applies: Submersible pumps for use externally must have a fixed cable connection with a length of at least 10 m. Regulations vary by country.

Dimensions (mm)

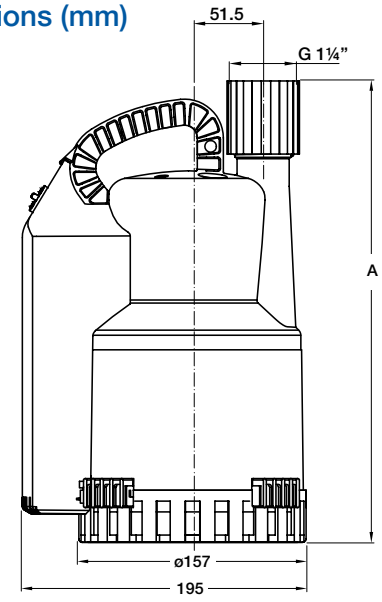

	A
Robusta 200	304
Robusta 300	324

Performance Curves

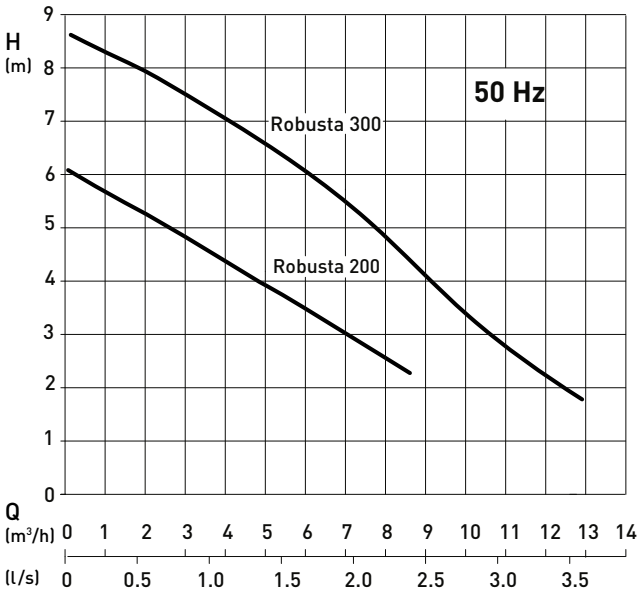

H = Total head; Q = Discharge volume
Curves to ISO 9906 (60 Hz available on request)

Hose adaptor

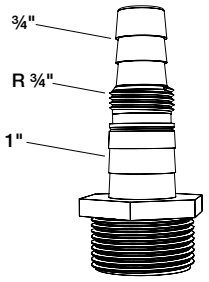

Accessories

Description	Part no.
Gate Valve (brass) with internal thread G 1¼"	14040005
Non-return Valve (synthetic) G 1¼" flap valve with internal thread.	61405030
NC Batteries 9VTR 7-8 for mains independent operation.	12820018
Control Unit for double pumping station. Automatic changing of the start sequence, alarm, and potential-free fault indicator.	Contact Sulzer

Description	Part no.
Plug-in Alarm Kits: Acoustic alarm with signalling unit for connection to 230 V Schuko socket. Acoustic alarm signal, potential-free NO (Normally Opened) contact (I max 12 A / V max 250 V). Optional rechargeable accumulators for mains-independent alarm signal.	
With KS float switch	16025001
With NSM05 "broken finger"	16025003
With humidistat	16025004
WM-Stop Alarm Kits: Acoustic alarm with signalling unit for plugging in to a 230 V Schuko socket, with integral 230 V Schuko socket into which the washing machine is plugged (I max 16 A). Optional rechargeable accumulators for mains-independent alarm signal.	
With KS float switch	16025002
With NSM05 "broken finger"	16025005
With humidistat	16025006