Dolphin Active Smart automatische bodemzuiger

Omschrijving: Dolphin Active Smart automatische bodemzuiger met PVC borstels
Artikelnummer leverancier: 99996403-BEH

DOLPHIN ACTIVE SMART CB

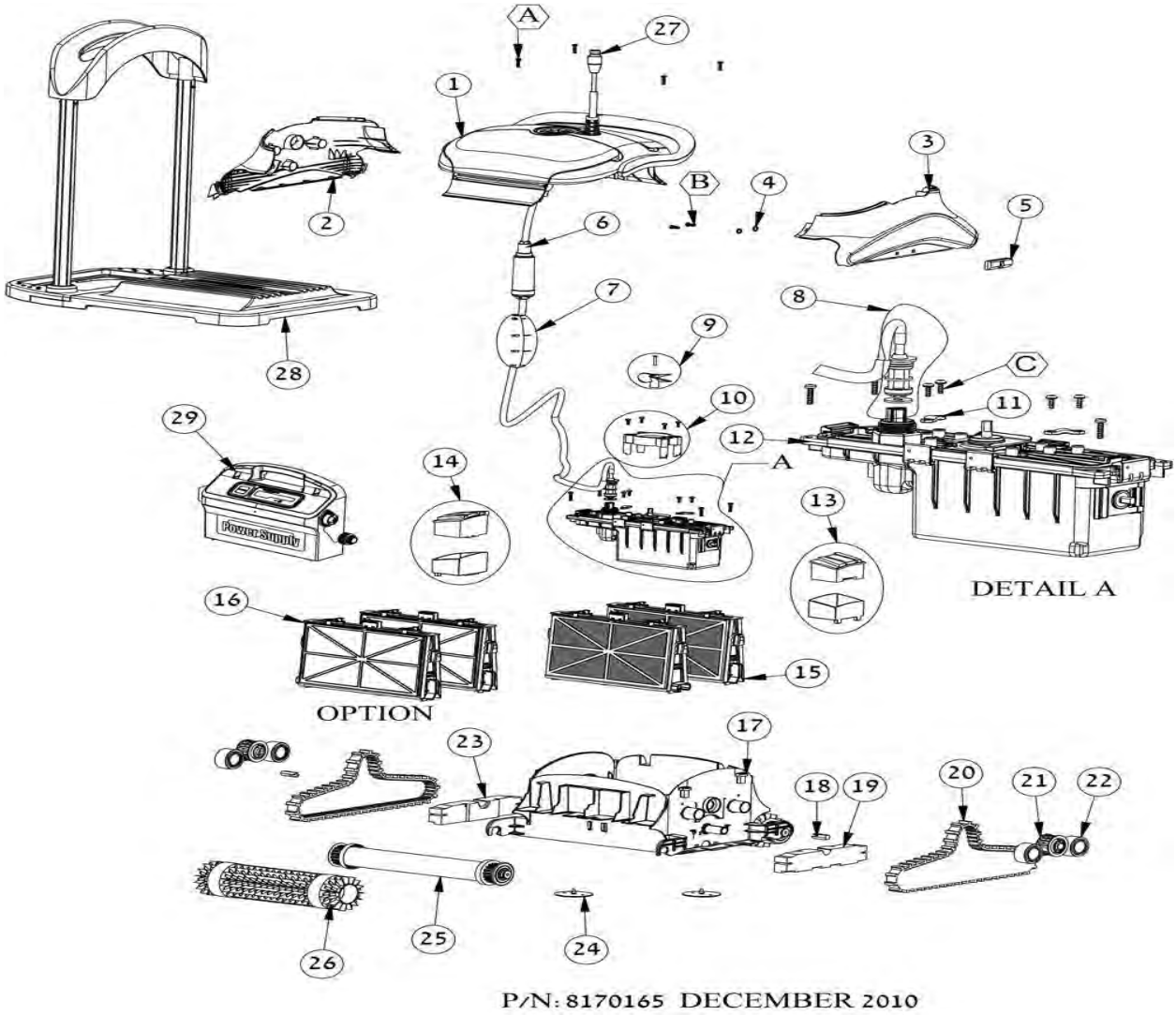

06 CABLE ASSY DIAG DIY 18M'-CATAL
07 FLOAT ASSY D.BASIC BLUE

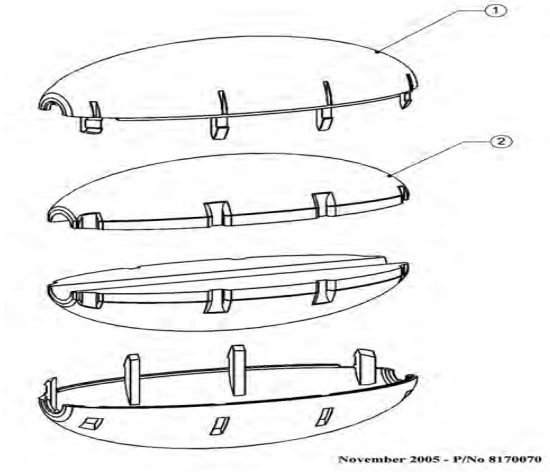

08 RETROFIT FOR CABLE CON. 2010

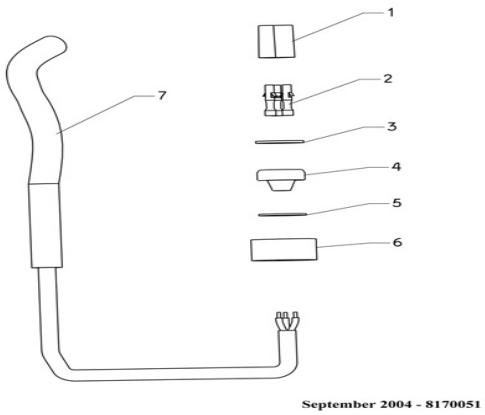

Dolphin Active Smart automatische bodemzuiger

12 MOTOR UNIT BASIC E55-CATALOG KIT

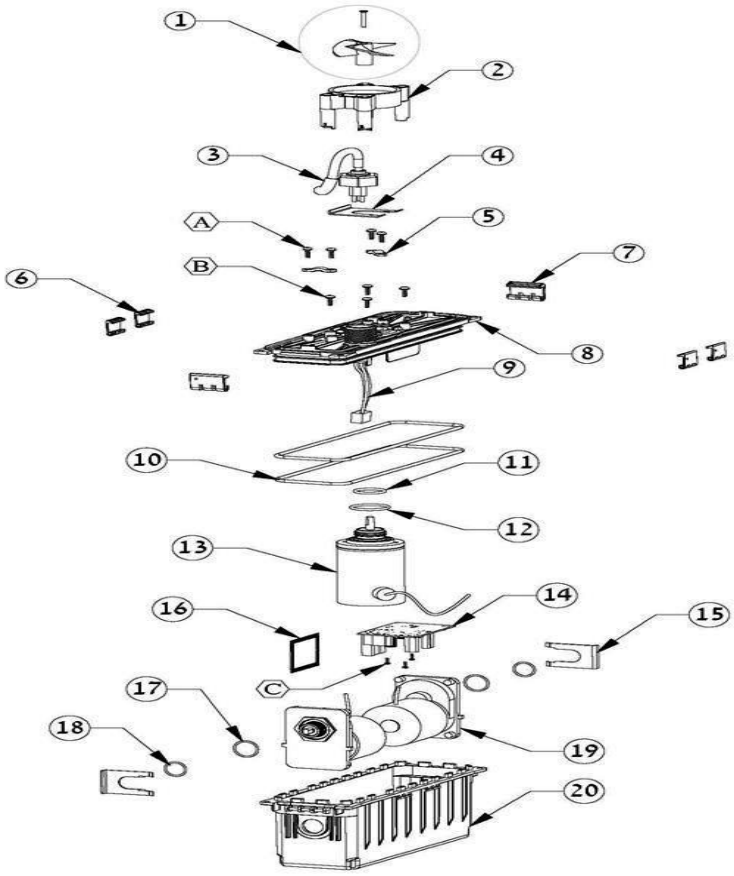

P/N: 8170159 SEPTEMBER 2010

15 ULTRA-FINE FILTER ASSEMBLY (2010)
25 DIAG. BASIC - WHEEL TUBE ASSY

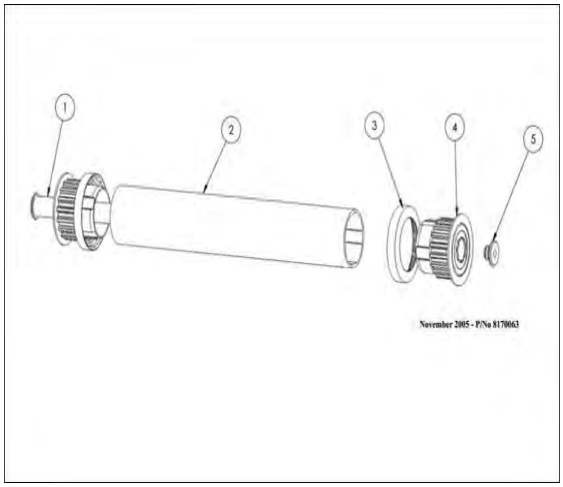

26 BRUSHES CATALOG KIT-DARK GREY DG

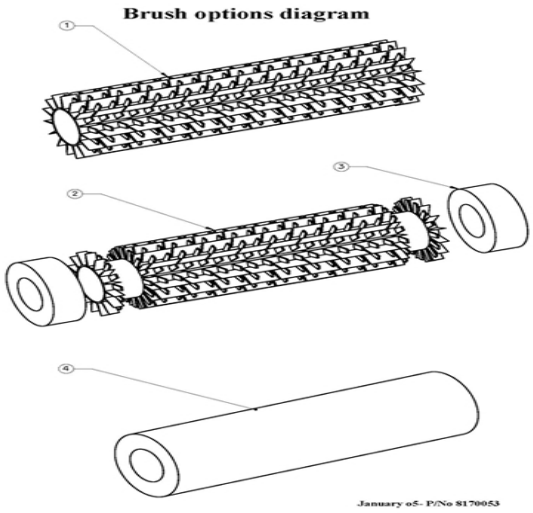

Dolphin Active Smart automatische bodemzuiger

28 DB STAND

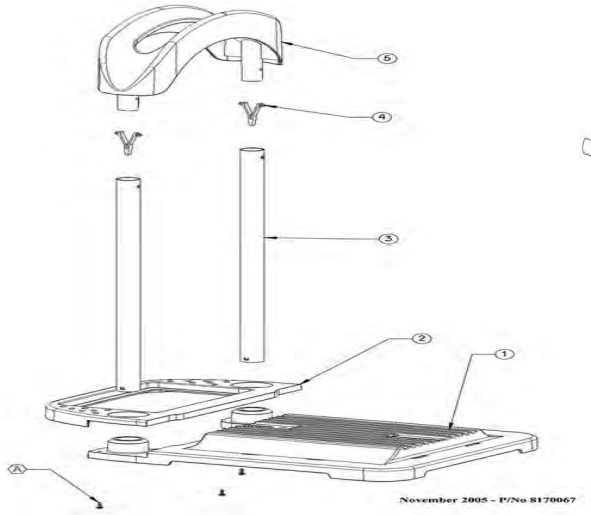

29 POWER SUPPLY DIAGNOSTIC

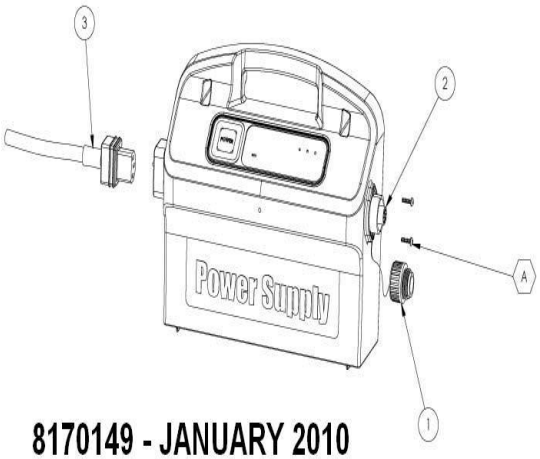

Positie	Omschrijving	Artikel Pomaz	Aantal	Artikel Lc	Bijzonderheden
01	Dolphin behuizing bovenplaat	1989225		99952058-ASSY	
02	SIDE PANEL L FOR MBC8 GREY			99807853	
03	SIDE PANEL R FOR MBC8 GREY			99807843	
04	DISK 8 FOR LIGHTS PLUG MAGIC			9950220	
05	Dolphin behuizing geleidingswiel	1989228		9991087-ASSY	
06	CABLE ASSY DIAG DIY 18M'-CATAL				
06.01	BLUE 2-WIRE THICK CABLE WITH SWIVEL, 18M/60FT			9995862-DIY	
06.02	Dolphin drijfkabel 1,2 meter 2-aderig	1989779		9995793-DIY	met swivel
07	FLOAT ASSY D.BASIC BLUE			**99960081**	
07.01	CABLE FLOAT COVER FLOATING			9982263	BLUE
07.02	POLYSTYRENE FLOAT			6250930	
08	RETROFIT FOR CABLE CON. 2010			**9991273**	
08.01	CABLE CONN.THREE PIN			9985048	
08.02	CABLE CONNECTOR			1811404	
08.03	PLASTIC WASHER 7MM X 2MM			9985027	
08.04	RK RING FOR CABLE CONN.			3861002	
08.05	GLANDE WASHER 13MM			9980025	
08.06	NUT FOR MBU TERMINAL 2010			9980728	
09	BLACK IMPELLER+SCREW DC			9995266	
10	Dolphin waaierhuis met schroeven	1989175		9991044-ASSY	
11	CABLE HOLDER DB			9982332	
12	MOTOR UNIT BASIC E55-CATALOG KIT				
12.01	BLACK IMPELLER+SCREW DC			9995266	
12.02	RETROFIT FOR CABLE CON. 2010			**9991273**	
12.02.01	CABLE CONN.THREE PIN			9985048	
12.02.02	CABLE CONNECTOR			1811404	
12.02.03	PLASTIC WASHER 7MM X 2MM			9985027	
12.02.04	RK RING FOR CABLE CONN.			3861002	
12.02.05	GLANDE WASHER 13MM			9980025	
12.02.06	NUT FOR MBU TERMINAL 2010			9980728	
12.03	Dolphin waaierhuis met schroeven	1989175		9991044-ASSY	

Dolphin Active Smart automatische bodemzuiger

12.04	IMPELLER MOTOR HOLDER 2			5588902	
12.05	CABLE HOLDER DB			9982332	
12.06	MBU COVER LOCKER LENGTH SIDE			9980726	
12.07	MBU COVER LOCKER SHORT SIDE			9980727	
12.08	MBU COVER DIAG/DYN 2010 ASSY			9991217-DIY	
12.09	SEAL 202X4 MBU 2010			3864202	
12.10	SEAL ORING 19X2 D.M			3861902	
12.11	CABLE MBU 2010			5890051LF	
12.12	SEAL ORING 25X3 I.M			3862503	
12.13	SEAL ORING 32X3			5583323	
12.14	DRIVE MOTOR HOLDER			5588900	
12.15	SEAL ORING 2-119 D.M			3862119	
12.16NW	DRIVE MOTOR 2010 ASSY M20			9991205-ASSY	
12.16OL	DRIVE MOTOR 2010 ASSY			9991219-ASSY	
12.17NW	ELECT.CARD DIAG BASIC 8 M21 ASSY			9995016	
12.17OL	ELECT. CARD DIAG BASIC 2010 ASSY			9995005	
12.18	DESSICATING BAG			4850010	
12.19NW	IMPELLER MOTOR 2010 ASSY M20			9991204-ASSY	
12.19OL	IMPELLER MOTOR 2010 ASSY			9991218-ASSY	
12.20	MBU BOX DIAG 2010			9980722	
12.A	Dolphin schroef KA50x12 WN1412 A2	1989057		3379440-A	
12.A	Dolphin schroef KA50x12 WN1412 A2	1989057		3379440-A	
12.B	Dolphin schroef KA50x12 WN1412 A2	1989057		3379440-A	
12.B	Dolphin schroef KA50x12 WN1412 A2	1989057		3379440-A	
12.C	Dolphin schroef KA30x8 WN1412	1989392		3389208-A	
12.MU1	Dolphin motorbox compleet	1989233		99953050-ASSY	
12.MU2	MU DIAG BASIC 8 EX			99953050-EX	
12.OLD1	MU DIAG BASIC (E55) NEW			9995383-ASSY	
12.OLD2	MU DIAG BASIC (E55) EX			9995383-EX	
13	Dolphin drijver links met behuizing	1989185		9991073-ASSY	
14	Dolphin drijver rechts met behuizing	1989176		9991074-ASSY	
15	ULTRA-FINE FILTER ASSEMBLY (2010)			**9991427-ASSY**	
15.01	FINE FILTER ASSEMBLY (2010)			9991428-ASSY	
15.02	Dolphin filtercartridge ultrafijn 50µ, set 4st	1211220		9991432-ASSY	
15.03	Dolphin filtercartridge grof 110µ, set 4st	1211221		9991433-ASSY	
16	Dolphin filtercartridge grof 110µ, set 4st	1211221		9991433-ASSY	
17	2010 BODY NO ACTIVE BRUSH			9980703	
18	D TYPE ADAPTOR			3865005	
19	FLOAT FOR SIDE PANEL E55/LIBERTY			6250951	
19	FLOAT FOR SIDE PANEL E55/LIBERTY			6250951	
20	TRACK - TIMING TRACK GREY			9985006	
21	PULLEY FOR FLAT SHAFT - TT			3883645	
22	GUIDE WHEEL			3884997	
23	FLOAT FOR SIDE PANEL E55/LIBERTY			6250951	
23	FLOAT FOR SIDE PANEL E55/LIBERTY			6250951	
24	Dolphin terugsklagklep set (2 stuks)	1989181		9991046-ASSY	
25	Dolphin aandrijfrol	1989067		**99955951-ASSY**	
25.01	DIAG. BASIC - INNER WHEEL TUBE			6101914	
25.02	WHEEL TUBE FOR D.BASIC			6101911	
25.03	DIAG.BASIC STOPPER RING			3885000	
25.04	Dolphin wiellager aandrijfrol	1989202		3884073-ASSY	
25.05	CORK FOR INNER WHEEL TUBE D.BASI			9982275	

Dolphin Active Smart automatische bodemzuiger

26	BRUSHES CATALOG KIT-DARK GREY DG				
26.01	BRUSH PVC DIAG DARK GREY			6101571	
26.02	BRUSH PVC DIAG GREY CB			6101644	
26.03	BRUSH WB RING FOR CB			6101611	
26.04	BRUSH WB DIAGNOSTIC			6101610	
26.05	WHEEL ASSY DIAG TT CB GREY			99955287-ASSY	
27	AMPHENOL PLUG			5000009	
28	DB STAND			**9991007**	
28.01	BASE STAND FOR MOBY			9986041	
28.02	P.S BASE FOR MOBY STAND			9986042	
28.02B	P.S 2010 BASE FOR MOBY STAND			9986044	
28.03	ALUMINIUM TUBE FOR CADDY			7300305	
28.04	PLASTIC SPRING LATCH FOR STAND			9980029	
28.05	CABLE HOLDER FOR MOBY STAND			9986043	
28.A	Dolphin schroef KA50x12 WN1412 A2	1989057		3379440-A	
29	Dolphin voeding 230 V	1989267		**9995670-ASSY**	
29.01	AMPH. SOCKET COVER FOR P.S			5020012	
29.02	AMPH. SOCKET FOR P.S			5020011	
29.03	Dolphin voedingskabel compleet	1989223		58984401LF	
29.03OD	CABLE SWITCHING POWER SUPPLY EU			5898411LF	
29.A	SCREW KA30X12 WN1412 A2			3379212	
A	SCREW KA50X20 WN1412			3379720-A	
B	Dolphin schroef KA50x16	1989296		3379616-A	
C	Dolphin schroef KA50x12 WN1412 A2	1989057		3379440-A	